Data Sheet | Item Number: 890-202

Socket; 2-pole; Cod. A; 1,50 mm²; black

https://www.wago.com/890-202

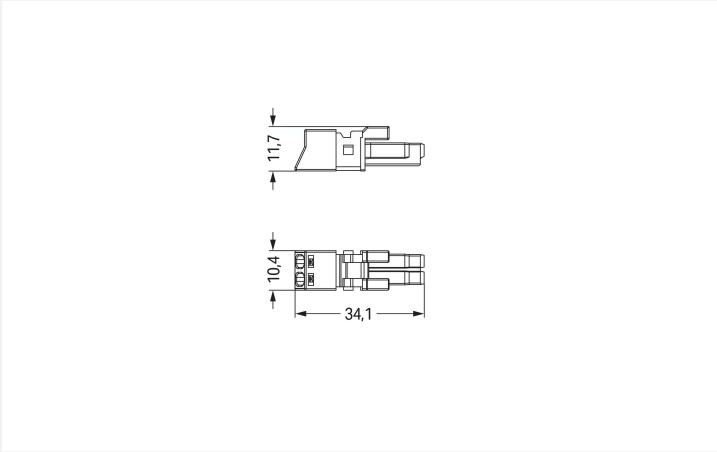

Color: ■ black

Dimensions in mm

Female connector/socket *WINSTA*® MINI A coding

For signal and power transmission: The *WINSTA*® MINI female connector/socket with protection against mismating. WAGO pluggable installation connectors can be used when criteria repeat or are distributed on a specified grid, for example for installing grid lighting or flush-mount lighting. The coding options reduce installation errors, allowing fast, secure wiring of all components. The *WINSTA*® MINI pluggable installation connector with A coding in white or black is normally used for general mains applications in power distribution. Particularly if only limited space is available, our smallest pluggable connection system, *WINSTA*® MINI, conveniently displays its strengths. It is very compact, and, with Push-in CAGE CLAMP® spring pressure connection technology, it also can be installed quickly, since the connection is low-maintenance and can be performed without screw connections.

Push-in CAGE CLAMP® spring pressure connection technology – pluggable installation instead of laborious screw connections!

The WINSTA® Pluggable Connection System allows pluggable electrical installation. This saves time, lowers costs, and reduces the need for servicing. Now you can also cut installation costs without compromising quality and safety: with protection type IP20 reduces the need for servicing and prevents unnecessary downtime.

- effective protection against mismating
- compact design for conductors with a cross-section up to 1.5 mm²
- with A coding for a large number of uses
- ready to install and use immediately
- fast, secure installation

Notes

General safety information	1. Only to be used by a qualified electrician or by a person electrically instructed for the task (EIP per DIN VDE 0105-100). 2. Do not install while energized or under load. 3. Use only for its intended purpose. 4. Observe applicable national regulations, standards and directives. 5. Observe the technical specifications of the products. 6. Ensure correct polarity assignment. 7. Do not use damaged or contaminated components. 8. Observe conductor types, conductor cross-sections, strip lengths and cable diameters. 9. Insert conductors up to the stop. 10. Use only with locking lever and strain relief. 11. Use original accessories only. **To be sold only with installation instructions!**

Electrical data

Ratings per	IEC/EN 60664-1		
Overvoltage category	III	III	II
Pollution degree	3	2	2
Nominal voltage	250 V	-	-
Rated impulse withstand voltage	4 kV	-	-
Rated current	16 A	-	-

Approvals per	UL 1977
Rated voltage	600 V
Rated current	14 A

General information

Note on contact resistance	approx. 1 mΩ of contact resistance approx. 0.25 mΩ contact transition plug/socket

Connection Data

Clamping units	2
Total number of potentials	2

Connection 1

Connection technology	Push-in CAGE CLAMP®
Actuation type	Operating tool Push-in
Nominal cross-section	1.5 mm² / 16 AWG
Solid conductor	0.25 … 1.5 mm² / 22 … 16 AWG
Solid conductor; push-in termination	0.75 … 1.5 mm² / 20 … 16 AWG
Stranded conductor	0.25 … 1 mm² / 22 … 18 AWG
Fine-stranded conductor	0.25 … 1.5 mm² / 22 … 16 AWG
Fine-stranded conductor; with insulated ferrule	0.25 … 0.75 mm² / 22 … 20 AWG
Fine-stranded conductor; with uninsulated ferrule	0.25 … 0.75 mm² / 22 … 20 AWG
Fine-stranded conductor; with ferrule; push-in termination	0.75 mm² / 20 AWG
Strip length	9 mm / 0.35 inches
Pole number	2
Conductor entry direction to mating direction	0 °
Coding	A

Physical data

Pin spacing	4.4 mm / 0.173 inches
Width	10.4 mm / 0.409 inches
Height	11.7 mm / 0.461 inches
Depth	34.1 mm / 1.343 inches

Mechanical data

Use	General mains applications
Variable coding	No
Marking	L N
Potential marking	L N
Mating force of a plug-in connection	approx. 20 … 70 N (depending on pole number)
Retention force of a plug-in connection	Locked: > 80 N
Unmating force of a plug-in connection	Unlocked: approx. 20 … 70 N (depending on pole number)
Number of mating cycles	200, without resistive load
Protection type	IP20; IP40 with strain relief housing

 Continued on next page

Plug-in connection

Contact type (pluggable connector)	Female connector/socket
Connector (connection type)	for conductor
Mismating protection	Yes
Note on mismating protection	All *WINSTA®* components are 100% protected against mismating when: a.) plugging different numbers of poles b.) plugging while rotated 180 c.) plugging while laterally staggered d.) plugging one pole
Locking lever	Can be retrofitted
Locking of plug-in connection	Locking lever
Note on locking system	All connectors for mounted installations (snap-in versions for lighting fixtures or devices, all types of PCB and distribution connectors) are factory-equipped with locking levers to ensure plugs and sockets are securely locked. Additional locking levers are only required for flying leads (plug/socket).

Material data

Note (material data)	Information on material specifications can be found here
Color	black
Cover color	gray
Material group	I
Insulation material (main housing)	Polyamide (PA66)
Flammability class per UL94	V0
Clamping spring material	Chrome-nickel spring steel (CrNi)
Contact material	Copper or copper alloy; surface-treated
Contact Plating	Tin
Fire load	0.046 MJ
Weight	2.6 g

Environmental requirements

Processing temperature	-5 … +40 °C
Continuous operating temperature	-35 … +85 °C
Note on continuous operating temperature	Insulating parts for temperatures ≤ 105 °C

Commercial data

Product Group	20 (Winsta)
PU (SPU)	50 pcs
Packaging type	Box
Country of origin	PL
GTIN	4055143548458
Customs tariff number	85366990990

Product Classification

UNSPSC	39121409
eCl@ss 10.0	27-44-06-05
eCl@ss 9.0	27-44-06-05
ETIM 9.0	EC002560
ETIM 10.0	EC002560
ECCN	NO US CLASSIFICATION

 Continued on next page

Environmental Product Compliance

RoHS Compliance Status	Compliant,No Exemption

Approvals / Certificates

General approvals

Approval	Standard	Certificate Name
CCA DEKRA Certification B.V.	EN 61535	71-123231
CCA DEKRA Certification B.V.	IEC 61535	NL-85020
cURus Underwriters Laboratories Inc.	UL 1977	E45171

Declarations of conformity and manufacturer's declarations

Approval	Standard	Certificate Name
EU-Declaration of Conformity WAGO GmbH & Co. KG	-	-
UK-Declaration of Conformity WAGO GmbH & Co. KG	-	-

Approvals for marine applications

Approval	Standard	Certificate Name
ABS American Bureau of Shipping	Steel Vessel Rules	24-0095973-PDA
DNV GL Det Norske Veritas, Germanischer Lloyd	-	TAE00001Z6
LR Lloyds Register	EN 61535	LR23317167TA
PRS Polski Rejestr Statków	-	TE/1096/880590/23

Downloads

Environmental Product Compliance

Compliance Search

Environmental Product Compliance 890-202

Documentation

Bid Text

890-202	19.02.2019	xml 2.95 KB	
890-202	08.06.2015	doc 23.00 KB	

 Continued on next page

CAD/CAE-Data

CAD data	CAE data
2D/3D Models 890-202	EPLAN Data Portal 890-202
	WSCAD Universe 890-202
	ZUKEN Portal 890-202

1 Compatible Products

1.1 System counterpart

1.1.1 Cable assembly

Item No.: 891-8992/205-101
pre-assembled connecting cable; Eca; Plug/open-ended; 2-pole; Cod. A; H05VV-F 2 x 1.0 mm²; 1 m; 1,00 mm²; black

Item No.: 891-8992/005-101
pre-assembled interconnecting cable; Eca; Socket/plug; 2-pole; Cod. A; H05VV-F 2 x 1.0 mm²; 1 m; 1,00 mm²; black

1.1.2 Distribution connector

Item No.: 890-1634
h-distribution connector; 2-pole; Cod. A; 1 input; 2 outputs; outputs on one side; 2 locking levers; black

Item No.: 890-1636
h-distribution connector; 2-pole; Cod. A; 1 input; 2 outputs; outputs on one side; 3 locking levers; for flying leads; black

Item No.: 890-1606
T-distribution connector; 2-pole; Cod. A; 1 input; 2 outputs; 2 locking levers; black

Item No.: 890-1615
T-distribution connector; 2-pole; Cod. A; 1 input; 2 outputs; 3 locking levers; for flying leads; black

1.1.3 Male connector/plug

Item No.: 890-812/011-000
Plug for PCBs; angled; 2-pole; Cod. A; black

Item No.: 890-812
Plug for PCBs; straight; 2-pole; Cod. A; black

Item No.: 890-212
Plug; 2-pole; Cod. A; 1,50 mm²; black

Item No.: 890-112
Plug; with strain relief housing; 2-pole; 1,50 mm²; black

Item No.: 890-212/342-000
Plug; with strain relief housing; 2-pole; Cod. A; 1,50 mm²; black

Item No.: 890-712
Snap-in plug; 2-pole; Cod. A; 1,50 mm²; black

1.2 Required Accessories

1.2.1 Locking system

1.2.1.1 Locking system

Item No.: 890-111
Locking lever; for flying leads; for tool operation; black

Item No.: 890-131
Locking lever; for flying leads; for tool operation; white

Item No.: 890-101
Locking lever; for manual operation; black

Item No.: 890-121
Locking lever; for manual operation; white

Continued on next page

1.2.2 Strain relief

1.2.2.1 Strain relief housing

Item No.: 890-502/342-000
Strain relief housing; 2-pole; with locking clip; for 1 cable; 3.8 ... 8.2 mm; 17.5 mm; black

Item No.: 890-512/342-000
Strain relief housing; 2-pole; with locking clip; for 1 cable; 3.8 ... 8.2 mm; 17.5 mm; white

Item No.: 890-502
Strain relief housing; 2-pole; with locking clip; for 1 cable; 3.8 ... 8.2 mm; 30 mm; black

Item No.: 890-512
Strain relief housing; 2-pole; with locking clip; for 1 cable; 3.8 ... 8.2 mm; 30 mm; white

1.3 Optional Accessories

1.3.1 Cover

1.3.1.1 Cover

Item No.: 897-2001
Protective cap; Type1; for sockets and plugs; PVC; red

1.3.2 Installation

1.3.2.1 Mounting accessories

Item No.: 890-310
Mounting carrier; 2- to 5-pole; for flying leads; black

Item No.: 890-311
Mounting carrier; 2- to 5-pole; for flying leads; white

1.3.3 Tool

1.3.3.1 Operating tool

Item No.: 890-382
Operating tool; 2-way; green

Item No.: 210-719
Operating tool; Blade: 2.5 x 0.4 mm; with a partially insulated shaft

Installation Notes

Conductor termination

1. Strip length, outer insulation = 30 mm (2-pole), 37 mm (3-pole), 45 mm (4- and 5-pole)
2. Strip length = 9 mm
3. Extended ground conductor = 8 mm

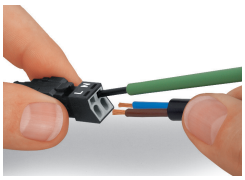

To terminate fine-stranded conductors, open the clamping unit via screwdriver – 2.5 mm blade width – and insert a stripped conductor until it hits the backstop.
Terminate solid conductors by simply pushing them in.

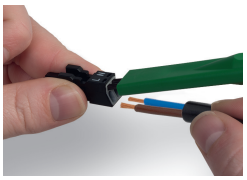

To terminate fine-stranded conductors, open clamping units via operating tool (890-382) and insert stripped conductors until they hit backstop.
Terminate solid conductors by simply pushing them in.

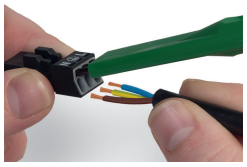

To terminate fine-stranded conductors, open clamping units via operating tool (890-383) and insert stripped conductors until they hit backstop.
Terminate solid conductors by simply pushing them in.

 Continued on next page

Installation

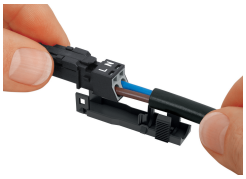

Latch the wired connector into the base of the strain relief housing.

Push down strain relief clamp by hand.

Push down strain relief clamp with 2.5 mm screwdriver alternately on both sides.

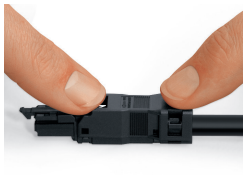

Latch the top of the strain relief housing.

The printed marking of the connector is clearly visible in the openings of the strain relief housing.