Data Sheet | Item Number: 870-911

2-conductor through terminal block; 2.5 mm²; side and center marking; for DIN-15 rail; CAGE CLAMP®; 2,50 mm²; gray

https://www.wago.com/870-911

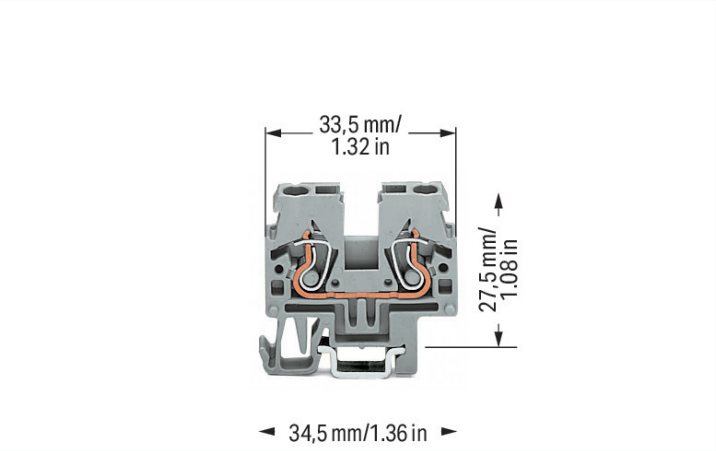

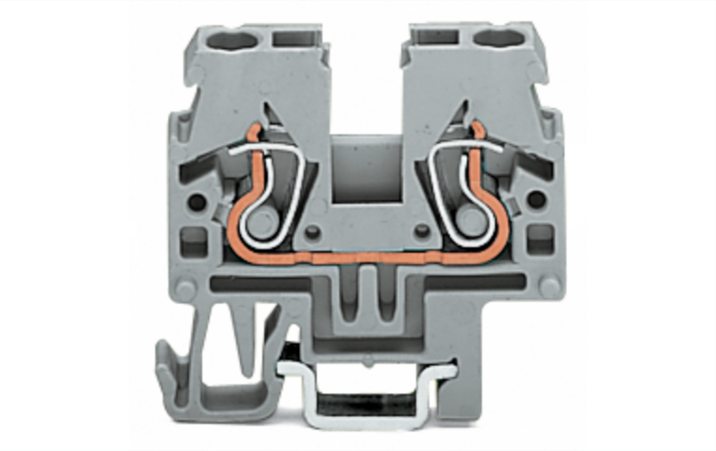

Color: gray

Similar to illustration

Through terminal block, 870 Series, gray

Connecting conductors is quick and easy with this through terminal block (item number 870-911). Strip lengths must be between 6 and 7 mm when connecting conductors to this through terminal block. Our mini rail-mount terminal blocks are perfect for tight spaces thanks to their compact design. You can also choose from a range of mounting and actuation variants for unparalleled flexibility, making it easy to select the ideal mini terminal block for each use. Featuring conductor terminals along with CAGE CLAMP®, this connector is highly versatile. Our celebrated universal connection known as CAGE CLAMP® leads the way when it comes to connection technology and electrical interconnections. This through terminal block is suitable for conductor cross sections ranging from 0.08 mm² to 2.5 mm².

An operating tool is used to operate this mini rail-mount terminal block.

 Continued on next page

Notes

Safety Information	Max. insulation diameter: 4.4 mm

Electrical data

Ratings per	IEC/EN 60947-7-1		
Overvoltage category	III	III	II
Pollution degree	3	2	2
Nominal voltage	500 V	-	-
Rated impulse withstand voltage	6 kV	-	-
Rated current	24 A	-	-

Power Loss	
Power loss, per pole (potential)	0.7661 W
Rated current I_N for power loss specification	24 A
Resistance value for specified, current-dependent power loss	0.00133 Ω

General information	
Wiring direction	Front-entry wiring

Connection Data

Clamping units	2
Total number of potentials	1
Number of levels	1

Connection 1	
Connection technology	CAGE CLAMP®
Actuation type	Operating tool
Connectable conductor materials	Copper
Solid conductor	0.08 … 2.5 mm² / 28 … 12 AWG
Fine-stranded conductor	0.08 … 4 mm² / 28 … 12 AWG
Fine-stranded conductor; with insulated ferrule	0.08 … 1.5 mm² / 28 … 14 AWG
Strip length	6 … 7 mm / 0.24 … 0.28 inches
Wiring direction	Front-entry wiring

Physical data

Width	5 mm / 0.197 inches
Height	34.5 mm / 1.358 inches
Depth from upper-edge of DIN-rail	26.5 mm / 1.043 inches

Mechanical data

Design	horizontal type
Mounting type	DIN-15 rail
Marking level	Side marking

Material data

Note (material data)	Information on material specifications can be found here
Color	gray
Material group	I
Insulation material (main housing)	Polyamide (PA66)
Flammability class per UL94	V0
Fire load	0.062 MJ
Weight	4 g

 Continued on next page

Environmental requirements

Processing temperature	-35 … +85 °C
Continuous operating temperature	-60 … +105 °C

Commercial data

Product Group	16 (Rail Mounted Terminal Blocks with CCC)
PU (SPU)	100 pcs
Packaging type	Box
Country of origin	DE
GTIN	4044918478458
Customs tariff number	85369010000

Product Classification

UNSPSC	39121410
eCl@ss 10.0	27-14-11-20
eCl@ss 9.0	27-14-11-20
ETIM 9.0	EC000897
ETIM 10.0	EC000897
ECCN	NO US CLASSIFICATION

Environmental Product Compliance

RoHS Compliance Status	Compliant,No Exemption

Approvals / Certificates

General approvals

Approval	Standard	Certificate Name
CCA DEKRA Certification B.V.	EN 60947	NTR NL 7468
CCA DEKRA Certification B.V.	EN 60947	2189801.01
cURus UL International Germany GmbH	UL 1059	E45172

Approvals for marine applications

Approval	Standard	Certificate Name
ABS American Bureau of Shipping	-	24-0152298-PDA
DNV GL Det Norske Veritas, Germanischer Lloyd	-	TAE00001V2
PRS Polski Rejestr Statków	-	TE/1094/880590/23

Declarations of conformity and manufacturer's declarations

Approval	Standard	Certificate Name
EU-Declaration of Conformity WAGO GmbH & Co. KG	-	-
UK-Declaration of Conformity WAGO GmbH & Co. KG	-	-

 Continued on next page

Downloads

Environmental Product Compliance

Compliance Search
Environmental Product Compliance 870-911

Documentation

Bid Text			
870-911	19.02.2019	xml 3.27 KB	
870-911	31.05.2017	doc 24.50 KB	

CAD/CAE-Data

CAD data
2D/3D Models 870-911

CAE data
EPLAN Data Portal 870-911
WSCAD Universe 870-911
ZUKEN Portal 870-911

1 Compatible Products

1.1 Required Accessories

1.1.1 End plate

1.1.1.1 End plate

Item No.: 870-923
End and intermediate plate; 2 mm thick; gray

Item No.: 870-924
End and intermediate plate; 2 mm thick; orange

1.2 Optional Accessories

1.2.1 DIN-rail

1.2.1.1 Mounting accessories

Item No.: 210-111
Steel carrier rail; 15 x 5.5 mm; 1 mm thick; 2 m long; slotted; according to EN 60715; silver-colored

Item No.: 210-295
Steel carrier rail; 15 x 5.5 mm; 1 mm thick; 2 m long; unslotted; according to EN 60715; silver-colored

Continued on next page

1.2.2 End plate

1.2.2.1 End plate

Item No.: 870-928
Separator plate; 2 mm thick; oversized; gray

Item No.: 870-929
Separator plate; 2 mm thick; oversized; orange

1.2.3 Ferrule

1.2.3.1 Ferrule

Item No.: 216-321
Ferrule; Sleeve for 0.25 mm² / AWG 24; insulated; electro-tin plated; yellow

Item No.: 216-131
Ferrule; Sleeve for 0.25 mm² / AWG 24; uninsulated; electro-tin plated; silver-colored

Item No.: 216-322
Ferrule; Sleeve for 0.34 mm² / 22 AWG; insulated; electro-tin plated; light turquoise

Item No.: 216-132
Ferrule; Sleeve for 0.34 mm² / 22 AWG; uninsulated; electro-tin plated

Item No.: 216-221
Ferrule; Sleeve for 0.5 mm² / 20 AWG; insulated; electro-tin plated; white

Item No.: 216-121
Ferrule; Sleeve for 0.5 mm² / AWG 22; uninsulated; electro-tin plated; silver-colored

Item No.: 216-222
Ferrule; Sleeve for 0.75 mm² / 18 AWG; insulated; electro-tin plated; gray

Item No.: 216-122
Ferrule; Sleeve for 0.75 mm² / 18 AWG; uninsulated; electro-tin plated; silver-colored

Item No.: 216-223
Ferrule; Sleeve for 1 mm² / AWG 18; insulated; electro-tin plated; red

Item No.: 216-123
Ferrule; Sleeve for 1 mm² / AWG 18; uninsulated; electro-tin plated; silver-colored

Item No.: 216-224
Ferrule; Sleeve for 1.5 mm² / AWG 16; insulated; electro-tin plated; black

Item No.: 216-124
Ferrule; Sleeve for 1.5 mm² / AWG 16; uninsulated; electro-tin plated

1.2.4 Installation

1.2.4.1 Mounting accessories

Item No.: 209-106
Mounting carrier; for isolated mounting on DIN 35 rails; gray

Item No.: 249-101
Screwless end stop; 6 mm wide; for WMB markers; gray

1.2.5 Insulation stop

1.2.5.1 Insulation stop

Item No.: 280-470
Insulation stop; 0.08 - 0.2 mm² "s" (0.14 mm² "f-st"); 5 pieces/strip; white

Item No.: 280-471
Insulation stop; 0.25 - 0.5 mm²; 5 pieces/strip; light gray

Item No.: 280-472
Insulation stop; 0.75 - 1 mm²; 5 pieces/strip; black

 Continued on next page

1.2.6 Jumper

1.2.6.1 Jumper

Item No.: 870-407/011-000

Item No.: 870-409/011-000

Item No.: 870-406/020-000
Delta jumper; insulated; light gray

Item No.: 870-410
Jumper; 10-way; insulated; light gray

Item No.: 870-402
Jumper; 2-way; insulated; light gray

Item No.: 870-403
Jumper; 3-way; insulated; light gray

Item No.: 870-404
Jumper; 4-way; insulated; light gray

Item No.: 870-405
Jumper; 5-way; insulated; light gray

Item No.: 870-406
Jumper; 6-way; insulated; light gray

Item No.: 870-407
Jumper; 7-way; insulated; light gray

Item No.: 870-408
Jumper; 8-way; insulated; light gray

Item No.: 870-409
Jumper; 9-way; insulated; light gray

Item No.: 870-440
Jumper; from 1 to 10; insulated; light gray

Item No.: 870-433
Jumper; from 1 to 3; insulated; light gray

Item No.: 870-434
Jumper; from 1 to 4; insulated; light gray

Item No.: 870-435
Jumper; from 1 to 5; insulated; light gray

Item No.: 870-436
Jumper; from 1 to 6; insulated; light gray

Item No.: 870-437
Jumper; from 1 to 7; insulated; light gray

Item No.: 870-438
Jumper; from 1 to 8; insulated; light gray

Item No.: 870-439
Jumper; from 1 to 9; insulated; light gray

Item No.: 870-405/011-000
Jumper; insulated; light gray

1.2.7 Marking

1.2.7.1 Group marker carrier

Item No.: 870-182
Adaptor; gray

Item No.: 870-183
Adaptor; gray

Item No.: 870-184
Adaptor; gray

1.2.7.2 Marker

Item No.: 2009-145/000-006
Mini-WSB Inline; for Smart Printer; 1700 pieces on roll; stretchable 5 - 5.2 mm; plain; snap-on type; blue

Item No.: 2009-145/000-007
Mini-WSB Inline; for Smart Printer; 1700 pieces on roll; stretchable 5 - 5.2 mm; plain; snap-on type; gray

Item No.: 2009-145/000-023
Mini-WSB Inline; for Smart Printer; 1700 pieces on roll; stretchable 5 - 5.2 mm; plain; snap-on type; green

Item No.: 2009-145/000-012
Mini-WSB Inline; for Smart Printer; 1700 pieces on roll; stretchable 5 - 5.2 mm; plain; snap-on type; orange

Item No.: 2009-145/000-005
Mini-WSB Inline; for Smart Printer; 1700 pieces on roll; stretchable 5 - 5.2 mm; plain; snap-on type; red

Item No.: 2009-145/000-024
Mini-WSB Inline; for Smart Printer; 1700 pieces on roll; stretchable 5 - 5.2 mm; plain; snap-on type; violet

Item No.: 2009-145
Mini-WSB Inline; for Smart Printer; 1700 pieces on roll; stretchable 5 - 5.2 mm; plain; snap-on type; white

Item No.: 2009-145/000-002
Mini-WSB Inline; for Smart Printer; 1700 pieces on roll; stretchable 5 - 5.2 mm; plain; snap-on type; yellow

Item No.: 248-501/000-006
Mini-WSB marking card; as card; not stretchable; plain; snap-on type; blue

Item No.: 248-501/000-007
Mini-WSB marking card; as card; not stretchable; plain; snap-on type; gray

Item No.: 248-501/000-023
Mini-WSB marking card; as card; not stretchable; plain; snap-on type; green

Item No.: 248-501/000-017
Mini-WSB marking card; as card; not stretchable; plain; snap-on type; light green

Item No.: 248-501/000-012
Mini-WSB marking card; as card; not stretchable; plain; snap-on type; orange

Item No.: 248-501/000-005
Mini-WSB marking card; as card; not stretchable; plain; snap-on type; red

Item No.: 248-501/000-024
Mini-WSB marking card; as card; not stretchable; plain; snap-on type; violet

Item No.: 248-501
Mini-WSB marking card; as card; not stretchable; plain; snap-on type; white

 Continued on next page

1.2.7.2 Marker

Item No.: 248-501/000-002
Mini-WSB marking card; as card; not stretchable; plain; snap-on type; yellow

Item No.: 793-5501/000-006
WMB marking card; as card; for terminal block width 5 - 17.5 mm; stretchable 5 - 5.2 mm; plain; snap-on type; blue

Item No.: 793-5501/000-007
WMB marking card; as card; for terminal block width 5 - 17.5 mm; stretchable 5 - 5.2 mm; plain; snap-on type; gray

Item No.: 793-5501/000-023
WMB marking card; as card; for terminal block width 5 - 17.5 mm; stretchable 5 - 5.2 mm; plain; snap-on type; green

Item No.: 793-5501/000-017
WMB marking card; as card; for terminal block width 5 - 17.5 mm; stretchable 5 - 5.2 mm; plain; snap-on type; light green

Item No.: 793-5501/000-012
WMB marking card; as card; for terminal block width 5 - 17.5 mm; stretchable 5 - 5.2 mm; plain; snap-on type; orange

Item No.: 793-5501/000-005
WMB marking card; as card; for terminal block width 5 - 17.5 mm; stretchable 5 - 5.2 mm; plain; snap-on type; red

Item No.: 793-5501/000-024
WMB marking card; as card; for terminal block width 5 - 17.5 mm; stretchable 5 - 5.2 mm; plain; snap-on type; violet

Item No.: 793-5501
WMB marking card; as card; for terminal block width 5 - 17.5 mm; stretchable 5 - 5.2 mm; plain; snap-on type; white

Item No.: 793-5501/000-002
WMB marking card; as card; for terminal block width 5 - 17.5 mm; stretchable 5 - 5.2 mm; plain; snap-on type; yellow

Item No.: 793-501/000-006
WMB marking card; as card; not stretchable; plain; snap-on type; blue

Item No.: 793-501/000-007
WMB marking card; as card; not stretchable; plain; snap-on type; gray

Item No.: 793-501/000-023
WMB marking card; as card; not stretchable; plain; snap-on type; green

Item No.: 793-501/000-017
WMB marking card; as card; not stretchable; plain; snap-on type; light green

Item No.: 793-501/000-012
WMB marking card; as card; not stretchable; plain; snap-on type; orange

Item No.: 793-501/000-005
WMB marking card; as card; not stretchable; plain; snap-on type; red

Item No.: 793-501/000-024
WMB marking card; as card; not stretchable; plain; snap-on type; violet

Item No.: 793-501
WMB marking card; as card; not stretchable; plain; snap-on type; white

Item No.: 793-501/000-002
WMB marking card; as card; not stretchable; plain; snap-on type; yellow

Item No.: 2009-115/000-006
WMB-Inline; for Smart Printer; 1500 pieces on roll; stretchable 5 - 5.2 mm; plain; snap-on type; blue

Item No.: 2009-115/000-007
WMB-Inline; for Smart Printer; 1500 pieces on roll; stretchable 5 - 5.2 mm; plain; snap-on type; gray

Item No.: 2009-115/000-023
WMB-Inline; for Smart Printer; 1500 pieces on roll; stretchable 5 - 5.2 mm; plain; snap-on type; green

Item No.: 2009-115/000-017
WMB-Inline; for Smart Printer; 1500 pieces on roll; stretchable 5 - 5.2 mm; plain; snap-on type; light green

Item No.: 2009-115/000-012
WMB-Inline; for Smart Printer; 1500 pieces on roll; stretchable 5 - 5.2 mm; plain; snap-on type; orange

Item No.: 2009-115/000-024
WMB-Inline; for Smart Printer; 1500 pieces on roll; stretchable 5 - 5.2 mm; plain; snap-on type; violet

Item No.: 2009-115
WMB-Inline; for Smart Printer; 1500 pieces on roll; stretchable 5 - 5.2 mm; plain; snap-on type; white

Item No.: 2009-115/000-002
WMB-Inline; for Smart Printer; 1500 pieces on roll; stretchable 5 - 5.2 mm; plain; snap-on type; yellow

1.2.7.3 Marking strip

Item No.: 709-196
Marking strips; for laser printer; translucent

Item No.: 709-177
Marking strips; on reel; 7.5 mm wide; not stretchable; plain; snap-on type; translucent

Item No.: 709-178
Marking strips; on reel; 7.5 mm wide; not stretchable; plain; snap-on type; white

1.2.8 Protective warning marker

1.2.8.1 Cover

Item No.: 280-405
Protective warning marker; for 5 terminal blocks; with high-voltage symbol, black; yellow

 Continued on next page

1.2.9 Test and measurement

1.2.9.1 Testing accessories

Item No.: 870-427
Spacer module; modular; bridging commoned terminal blocks; gray

Item No.: 870-426
Tap-off module; modular; suitable for 870 Series terminal blocks with jumper slots in the current bar; gray

Item No.: 870-425
Tap-off module; with anti-rotation protection; modular; suitable for 870 Series terminal blocks with jumper slots in the current bar; gray

1.2.10 Tool

1.2.10.1 Operating tool

Item No.: 210-658
Operating tool; Blade: 3.5 x 0.5 mm; with a partially insulated shaft; angled; short; multicoloured

Item No.: 210-720
Operating tool; Blade: 3.5 x 0.5 mm; with a partially insulated shaft; multicoloured

Item No.: 210-657
Operating tool; Blade: 3.5 x 0.5 mm; with a partially insulated shaft; short; multicoloured

Installation Notes

Installation

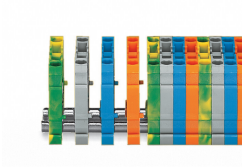

Mounting on DIN-15 rail:
Snap individual terminal blocks onto the DIN-15 rail and slide together.
Removal from DIN-15 rail:
Open assembly by laterally sliding terminal blocks with an operating tool and remove them from the rail.

Conductor termination

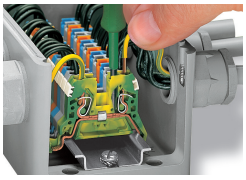

CAGE CLAMP® connection
Inserting a conductor via operating tool (0.08 ... 4 mm² “f-st”).
With ferruled conductors, it is necessary to use a terminal block one size smaller than the conductor's nominal cross-section.

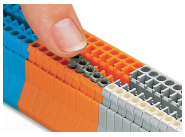

Inserting insulation stops into conductor entry holes of terminal strip.

 Continued on next page

Commoning

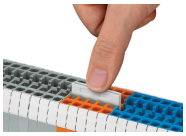

Push jumper bars down firmly until fully inserted. When using multipole bars, push alternately on the right and then left side until installed.
Push-in type jumper bars 1 – 3 – 5 – 7 or 1 – – 4 – – 7
upon request

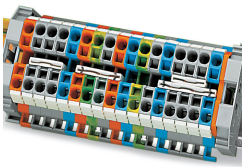

Commoning with push-in type jumper bars: Two parallel jumper slots are accommodated in one terminal block.

Testing

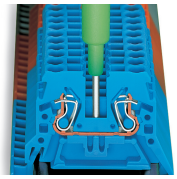

Testing with phase testing device, also possible with single-pole voltage tester.

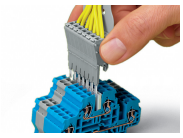

Testing is also possible using a pre-wired tap-off module assembly in the very same way as test plugs.

Cover

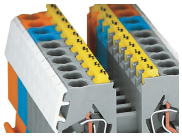

Protective warning markers (280-405), with a black high-voltage symbol

Marking

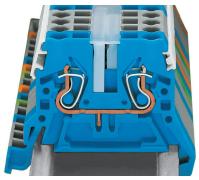

WMB markers in Mini-WSB marker slots
Translucent marking strip
Mini-WSB markers

Translucent marking strip (709-196) – jumpers below may be visible.

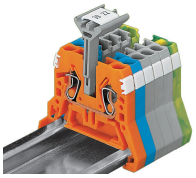

In addition to the plastic marker strips, group marker carriers are now available for the WMB and WSB marking systems. They can be mounted in parallel to a push-in type jumper bar via the open jumper contact slot. It is also very useful if the marker slots on the side of the terminal block are hidden. The carriers are available in the following widths: 5 mm (0.197 inch), 10 mm (0.394 inch) and 15 mm (0.591 inch).
Notice:
Group marker carriers are not suitable for ground conductor terminal blocks and double potential terminal blocks as they have no jumper contact slots.