Data Sheet | Item Number: 870-907

2-conductor ground terminal block; 2.5 mm²; lateral marker slots; for DIN-rail 35 x 15 and 35 x 7.5; CAGE CLAMP®; 2,50 mm²; green-yellow

https://www.wago.com/870-907

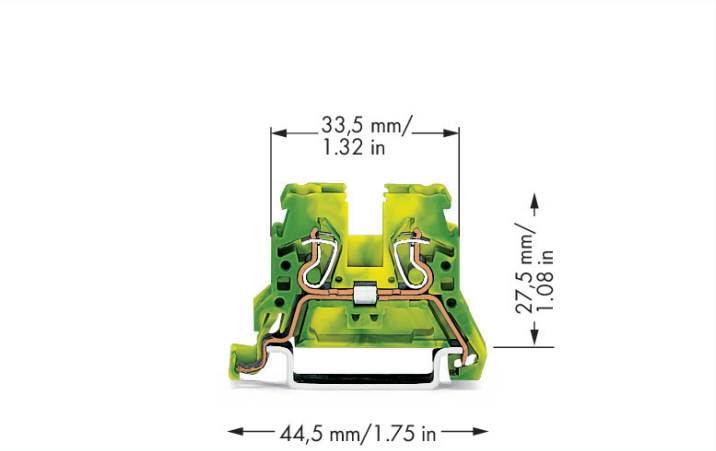

Color: green-yellow

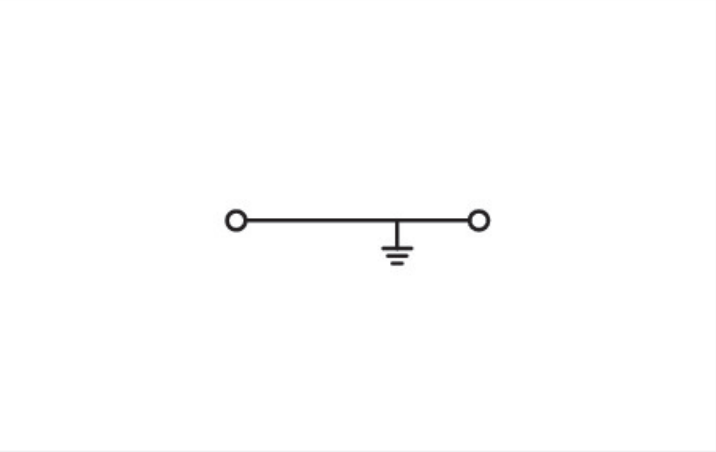

Similar to illustration

Ground terminal block, 870 Series, green-yellow

This ground terminal block (item number 870-907) is designed for quick and easy connections. Conductors should only be connected to this ground terminal block if their strip length is between 6 and 7 mm . Our ground terminal blocks create a direct connection between the mounting rail and the electrical conductors thanks to an integrated mounting foot. This connection ensures both electrical and mechanical stability between the conductors and the mounting adapter. This product features conductor terminals and utilizes CAGE CLAMP®. Our highly-rated and maintenance-free CAGE CLAMP® connection makes it easy to connect all conductor types without having to prepare the conductor. For example, you don't need to crimp ferrules. Depending on the type of conductor, this ground terminal block is ideal for conductor cross sections ranging from 0.08 mm² to 2.5 mm².

This mini rail-mount terminal block is operated with an operating tool.

Notes

Safety Information	Notice: This ground conductor terminal block cannot be commoned with push-in type jumper bars!
Safety information 2	Max. insulation diameter: 4.4 mm

Electrical data

Ratings per	IEC/EN 60947-7-2		
Overvoltage category	III	III	II
Pollution degree	3	2	2
Nominal voltage	-	-	-
Rated impulse withstand voltage	-	-	-
Rated current	-	-	-

General information	
Wiring direction	Front-entry wiring

Connection Data

Clamping units	2
Total number of potentials	1
Number of levels	1

Connection 1	
Connection technology	CAGE CLAMP®
Actuation type	Operating tool
Connectable conductor materials	Copper
Solid conductor	0.08 … 2.5 mm² / 28 … 12 AWG
Fine-stranded conductor	0.08 … 4 mm² / 28 … 12 AWG
Fine-stranded conductor; with insulated ferrule	0.08 … 1.5 mm² / 28 … 14 AWG
Strip length	6 … 7 mm / 0.24 … 0.28 inches
Wiring direction	Front-entry wiring

Physical data

Width	5 mm / 0.197 inches
Height	44.5 mm / 1.752 inches
Depth from upper-edge of DIN-rail	27.5 mm / 1.083 inches

Mechanical data

Design	horizontal type
Mounting type	DIN-35 rail
Marking level	Side marking

Material data

Note (material data)	Information on material specifications can be found here
Color	green-yellow
Material group	I
Insulation material (main housing)	Polyamide (PA66)
Flammability class per UL94	V0
Fire load	0.066 MJ
Weight	5.7 g

 Continued on next page

Environmental requirements

Processing temperature	-35 … +85 °C
Continuous operating temperature	-60 … +105 °C

Commercial data

Product Group	16 (Rail Mounted Terminal Blocks with CCC)
PU (SPU)	100 pcs
Packaging type	Box
Country of origin	DE
GTIN	4044918649728
Customs tariff number	85369010000

Product Classification

UNSPSC	39121410
eCl@ss 10.0	27-14-11-41
eCl@ss 9.0	27-14-11-41
ETIM 9.0	EC000901
ETIM 10.0	EC000901
ECCN	NO US CLASSIFICATION

Environmental Product Compliance

RoHS Compliance Status	Compliant,No Exemption

Approvals / Certificates

General approvals

Approval	Standard	Certificate Name
CCA DEKRA Certification B.V.	EN 60947	NTR NL 7468
CCA DEKRA Certification B.V.	EN 60947	2189801.01
cURus UL International Germany GmbH	UL 1059	E45172

Approvals for marine applications

Approval	Standard	Certificate Name
ABS American Bureau of Shipping	-	24-0152298-PDA
DNV GL Det Norske Veritas, Germanischer Lloyd	-	TAE00001V2
PRS Polski Rejestr Statków	-	TE/1094/880590/23

Declarations of conformity and manufacturer's declarations

Approval	Standard	Certificate Name
EU-Declaration of Conformity WAGO GmbH & Co. KG	-	-
UK-Declaration of Conformity WAGO GmbH & Co. KG	-	-

 Continued on next page

Downloads

Environmental Product Compliance

Compliance Search

Environmental Product Compliance 870-907

Documentation

Bid Text

870-907	19.02.2019	xml 3.20 KB	
870-907	31.05.2017	doc 24.50 KB	

CAD/CAE-Data

CAD data

2D/3D Models 870-907

CAE data

EPLAN Data Portal 870-907

WSCAD Universe 870-907

ZUKEN Portal 870-907

1 Compatible Products

1.1 Required Accessories

1.1.1 End plate

1.1.1.1 End plate

Item No.: 870-923
End and intermediate plate; 2 mm thick; gray

Item No.: 870-924
End and intermediate plate; 2 mm thick; orange

1.2 Optional Accessories

1.2.1 DIN-rail

1.2.1.1 Mounting accessories

Item No.: 210-196
Aluminum carrier rail; 35 x 8.2 mm; 1.6 mm thick; 2 m long; unslotted; similar to EN 60715; silver-colored

Item No.: 210-508
Steel carrier rail; 35 x 15 mm; 1.5 mm thick; 2 m long; slotted; galvanized; similar to EN 60715; silver-colored

Item No.: 210-197
Steel carrier rail; 35 x 15 mm; 1.5 mm thick; 2 m long; slotted; similar to EN 60715; silver-colored

Item No.: 210-506
Steel carrier rail; 35 x 15 mm; 1.5 mm thick; 2 m long; unslotted; galvanized; similar to EN 60715; silver-colored

Item No.: 210-114
Steel carrier rail; 35 x 15 mm; 1.5 mm thick; 2 m long; unslotted; similar to EN 60715; silver-colored

Item No.: 210-118
Steel carrier rail; 35 x 15 mm; 2.3 mm thick; 2 m long; unslotted; according to EN 60715; silver-colored

Item No.: 210-115
Steel carrier rail; 35 x 7.5 mm; 1 mm thick; 2 m long; slotted; according to EN 60715; "Hole width 18 mm; silver-colored

Item No.: 210-112
Steel carrier rail; 35 x 7.5 mm; 1 mm thick; 2 m long; slotted; according to EN 60715; "Hole width 25 mm; silver-colored

 Continued on next page

1.2.1.1 Mounting accessories

Item No.: 210-504
Steel carrier rail; 35 x 7.5 mm; 1 mm thick; 2 m long; slotted; galvanized; according to EN 60715; silver-colored

Item No.: 210-113
Steel carrier rail; 35 x 7.5 mm; 1 mm thick; 2 m long; unslotted; according to EN 60715; silver-colored

Item No.: 210-505
Steel carrier rail; 35 x 7.5 mm; 1 mm thick; 2 m long; unslotted; galvanized; according to EN 60715; silver-colored

1.2.2 End plate

1.2.2.1 End plate

Item No.: 870-928
Separator plate; 2 mm thick; oversized; gray

Item No.: 870-929
Separator plate; 2 mm thick; oversized; orange

1.2.3 Ferrule

1.2.3.1 Ferrule

Item No.: 216-321
Ferrule; Sleeve for 0.25 mm² / AWG 24; insulated; electro-tin plated; yellow

Item No.: 216-131
Ferrule; Sleeve for 0.25 mm² / AWG 24; uninsulated; electro-tin plated; silver-colored

Item No.: 216-322
Ferrule; Sleeve for 0.34 mm² / 22 AWG; insulated; electro-tin plated; light turquoise

Item No.: 216-132
Ferrule; Sleeve for 0.34 mm² / 22 AWG; uninsulated; electro-tin plated

Item No.: 216-221
Ferrule; Sleeve for 0.5 mm² / 20 AWG; insulated; electro-tin plated; white

Item No.: 216-121
Ferrule; Sleeve for 0.5 mm² / AWG 22; uninsulated; electro-tin plated; silver-colored

Item No.: 216-222
Ferrule; Sleeve for 0.75 mm² / 18 AWG; insulated; electro-tin plated; gray

Item No.: 216-122
Ferrule; Sleeve for 0.75 mm² / 18 AWG; uninsulated; electro-tin plated; silver-colored

Item No.: 216-223
Ferrule; Sleeve for 1 mm² / AWG 18; insulated; electro-tin plated; red

Item No.: 216-123
Ferrule; Sleeve for 1 mm² / AWG 18; uninsulated; electro-tin plated; silver-colored

Item No.: 216-224
Ferrule; Sleeve for 1.5 mm² / AWG 16; insulated; electro-tin plated; black

Item No.: 216-124
Ferrule; Sleeve for 1.5 mm² / AWG 16; uninsulated; electro-tin plated

1.2.4 Installation

1.2.4.1 Mounting accessories

Item No.: 209-106
Mounting carrier; for isolated mounting on DIN 35 rails; gray

Item No.: 249-117
Screwless end stop; 10 mm wide; for DIN-rail 35 x 15 and 35 x 7.5; gray

Item No.: 249-116
Screwless end stop; 6 mm wide; for DIN-rail 35 x 15 and 35 x 7.5; gray

Continued on next page

1.2.5 Insulation stop

1.2.5.1 Insulation stop

Item No.: 280-470
Insulation stop; 0.08 - 0.2 mm² "s" (0.14 mm² "f-st"); 5 pieces/strip; white

Item No.: 280-471
Insulation stop; 0.25 - 0.5 mm²; 5 pieces/strip; light gray

Item No.: 280-472
Insulation stop; 0.75 - 1 mm²; 5 pieces/strip; black

1.2.6 Marking

1.2.6.1 Marker

Item No.: 2009-145/000-006
Mini-WSB Inline; for Smart Printer; 1700 pieces on roll; stretchable 5 - 5.2 mm; plain; snap-on type; blue

Item No.: 2009-145/000-007
Mini-WSB Inline; for Smart Printer; 1700 pieces on roll; stretchable 5 - 5.2 mm; plain; snap-on type; gray

Item No.: 2009-145/000-023
Mini-WSB Inline; for Smart Printer; 1700 pieces on roll; stretchable 5 - 5.2 mm; plain; snap-on type; green

Item No.: 2009-145/000-012
Mini-WSB Inline; for Smart Printer; 1700 pieces on roll; stretchable 5 - 5.2 mm; plain; snap-on type; orange

Item No.: 2009-145/000-005
Mini-WSB Inline; for Smart Printer; 1700 pieces on roll; stretchable 5 - 5.2 mm; plain; snap-on type; red

Item No.: 2009-145/000-024
Mini-WSB Inline; for Smart Printer; 1700 pieces on roll; stretchable 5 - 5.2 mm; plain; snap-on type; violet

Item No.: 2009-145
Mini-WSB Inline; for Smart Printer; 1700 pieces on roll; stretchable 5 - 5.2 mm; plain; snap-on type; white

Item No.: 2009-145/000-002
Mini-WSB Inline; for Smart Printer; 1700 pieces on roll; stretchable 5 - 5.2 mm; plain; snap-on type; yellow

Item No.: 248-501/000-006
Mini-WSB marking card; as card; not stretchable; plain; snap-on type; blue

Item No.: 248-501/000-007
Mini-WSB marking card; as card; not stretchable; plain; snap-on type; gray

Item No.: 248-501/000-023
Mini-WSB marking card; as card; not stretchable; plain; snap-on type; green

Item No.: 248-501/000-017
Mini-WSB marking card; as card; not stretchable; plain; snap-on type; light green

Item No.: 248-501/000-012
Mini-WSB marking card; as card; not stretchable; plain; snap-on type; orange

Item No.: 248-501/000-005
Mini-WSB marking card; as card; not stretchable; plain; snap-on type; red

Item No.: 248-501/000-024
Mini-WSB marking card; as card; not stretchable; plain; snap-on type; violet

Item No.: 248-501
Mini-WSB marking card; as card; not stretchable; plain; snap-on type; white

Item No.: 248-501/000-002
Mini-WSB marking card; as card; not stretchable; plain; snap-on type; yellow

Item No.: 793-5501/000-006
WMB marking card; as card; for terminal block width 5 - 17.5 mm; stretchable 5 - 5.2 mm; plain; snap-on type; blue

Item No.: 793-5501/000-007
WMB marking card; as card; for terminal block width 5 - 17.5 mm; stretchable 5 - 5.2 mm; plain; snap-on type; gray

Item No.: 793-5501/000-023
WMB marking card; as card; for terminal block width 5 - 17.5 mm; stretchable 5 - 5.2 mm; plain; snap-on type; green

Item No.: 793-5501/000-017
WMB marking card; as card; for terminal block width 5 - 17.5 mm; stretchable 5 - 5.2 mm; plain; snap-on type; light green

Item No.: 793-5501/000-012
WMB marking card; as card; for terminal block width 5 - 17.5 mm; stretchable 5 - 5.2 mm; plain; snap-on type; orange

Item No.: 793-5501/000-005
WMB marking card; as card; for terminal block width 5 - 17.5 mm; stretchable 5 - 5.2 mm; plain; snap-on type; red

Item No.: 793-5501/000-024
WMB marking card; as card; for terminal block width 5 - 17.5 mm; stretchable 5 - 5.2 mm; plain; snap-on type; violet

Item No.: 793-5501
WMB marking card; as card; for terminal block width 5 - 17.5 mm; stretchable 5 - 5.2 mm; plain; snap-on type; white

Item No.: 793-5501/000-002
WMB marking card; as card; for terminal block width 5 - 17.5 mm; stretchable 5 - 5.2 mm; plain; snap-on type; yellow

Item No.: 793-501/000-006
WMB marking card; as card; not stretchable; plain; snap-on type; blue

Item No.: 793-501/000-007
WMB marking card; as card; not stretchable; plain; snap-on type; gray

Item No.: 793-501/000-023
WMB marking card; as card; not stretchable; plain; snap-on type; green

Item No.: 793-501/000-017
WMB marking card; as card; not stretchable; plain; snap-on type; light green

Item No.: 793-501/000-012
WMB marking card; as card; not stretchable; plain; snap-on type; orange

Item No.: 793-501/000-005
WMB marking card; as card; not stretchable; plain; snap-on type; red

Item No.: 793-501/000-024
WMB marking card; as card; not stretchable; plain; snap-on type; violet

Item No.: 793-501
WMB marking card; as card; not stretchable; plain; snap-on type; white

Item No.: 793-501/000-002
WMB marking card; as card; not stretchable; plain; snap-on type; yellow

Item No.: 2009-115/000-006
WMB-Inline; for Smart Printer; 1500 pieces on roll; stretchable 5 - 5.2 mm; plain; snap-on type; blue

 Continued on next page

1.2.6.1 Marker

Item No.: 2009-115/000-007
WMB-Inline; for Smart Printer; 1500 pieces on roll; stretchable 5 - 5.2 mm; plain; snap-on type; gray

Item No.: 2009-115/000-023
WMB-Inline; for Smart Printer; 1500 pieces on roll; stretchable 5 - 5.2 mm; plain; snap-on type; green

Item No.: 2009-115/000-017
WMB-Inline; for Smart Printer; 1500 pieces on roll; stretchable 5 - 5.2 mm; plain; snap-on type; light green

Item No.: 2009-115/000-012
WMB-Inline; for Smart Printer; 1500 pieces on roll; stretchable 5 - 5.2 mm; plain; snap-on type; orange

Item No.: 2009-115/000-024
WMB-Inline; for Smart Printer; 1500 pieces on roll; stretchable 5 - 5.2 mm; plain; snap-on type; violet

Item No.: 2009-115
WMB-Inline; for Smart Printer; 1500 pieces on roll; stretchable 5 - 5.2 mm; plain; snap-on type; white

Item No.: 2009-115/000-002
WMB-Inline; for Smart Printer; 1500 pieces on roll; stretchable 5 - 5.2 mm; plain; snap-on type; yellow

1.2.6.2 Marking strip

Item No.: 709-196
Marking strips; for laser printer; translucent

Item No.: 709-177
Marking strips; on reel; 7.5 mm wide; not stretchable; plain; snap-on type; translucent

Item No.: 709-178
Marking strips; on reel; 7.5 mm wide; not stretchable; plain; snap-on type; white

1.2.7 Protective warning marker

1.2.7.1 Cover

Item No.: 280-405
Protective warning marker; for 5 terminal blocks; with high-voltage symbol, black; yellow

1.2.8 Tool

1.2.8.1 Operating tool

Item No.: 210-658
Operating tool; Blade: 3.5 x 0.5 mm; with a partially insulated shaft; angled; short; multicoloured

Item No.: 210-720
Operating tool; Blade: 3.5 x 0.5 mm; with a partially insulated shaft; multicoloured

Item No.: 210-657
Operating tool; Blade: 3.5 x 0.5 mm; with a partially insulated shaft; short; multicoloured

Installation Notes

Installation

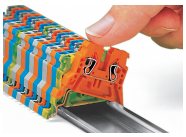

Snapping a rail-mount terminal block onto DIN-35 rail.

 Continued on next page

Conductor termination

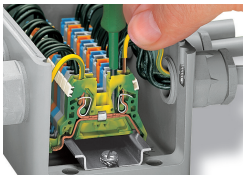

CAGE CLAMP® connection
Inserting a conductor via operating tool (0.08 ... 4 mm² "f-st").
With ferruled conductors, it is necessary to use a terminal block one size smaller than the conductor's nominal cross-section.

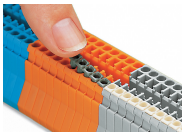

Inserting insulation stops into conductor entry holes of terminal strip.

Marking

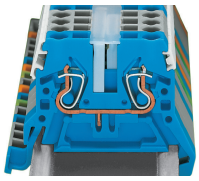

WMB markers in Mini-WSB marker slots
Translucent marking strip
Mini-WSB markers

Translucent marking strip (709-196) – jumpers below may be visible.