Data Sheet | Item Number: 857-800

Temperature signal conditioner for RTD sensors; Current and voltage output signal; Configuration via DIP switch; Supply voltage: 24 VDC; 6 mm module width; light gray

https://www.wago.com/857-800

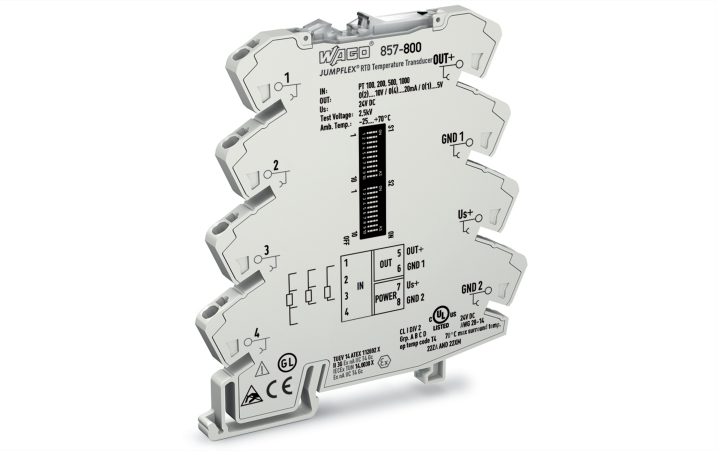

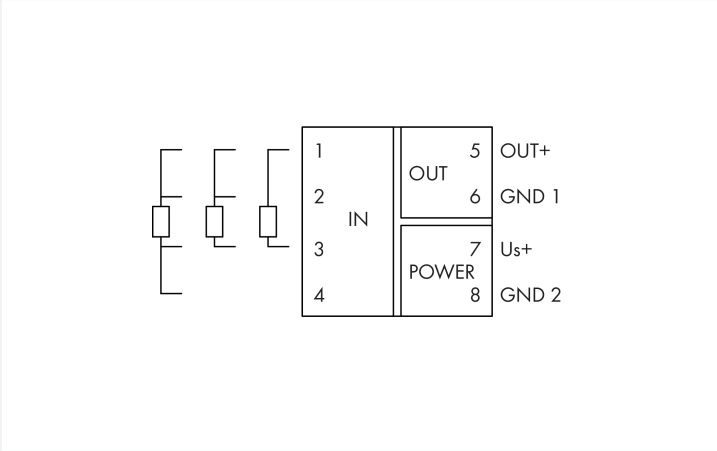

Color: light gray

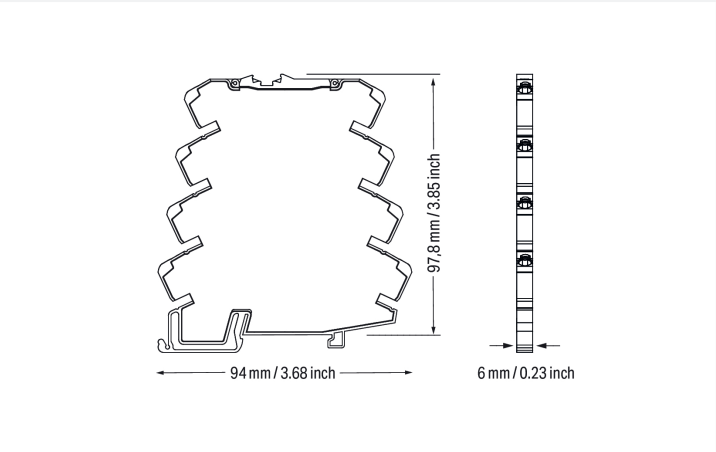

857-800

DIP Switch Adjustability

● = ON | Default

DIP Switch S1

Wire Connection			Sensor Type				Output Signal					Measurement Range Underflow	Measurement Range Overflow	Wire Break	Short Circuit
1	2		3	4	5		6	7	8		9	10				
		2 Leiter				Pt100				0 ... 20 mA			Lower limit of output range - 5 % *	Upper limit of output range + 2.5 % *	Upper limit of output range + 5 % *	Lower limit of output range - 12.5 % *
●		3 Leiter	●			Pt200	●			4 ... 20 mA						
	●	4 Leiter		●		Pt500		●		0 ... 10 mA	●		Lower limit of output range	Upper limit of output range + 2.5 %	Upper limit of output range + 5 %	Lower limit of output range
			●	●		Pt1000	●	●		2 ... 10 mA						
					●	1 kΩ			●	0 ... 10 V	●		Lower limit of output range	Upper limit of output range	Upper limit of output range + 5 %	Upper limit of output range + 5 %
			●		●	4,5 kΩ	●		●	2 ... 10 V						
								●	●	0 ... 5 V	●	●	Lower limit of output range	Upper limit of output range	Lower limit of output range	Lower limit of output range
							●	●	●	1 ... 5 V						

* acc. to NAMUR NE 43

DIP Switch S2

Start Temperature						End Temperature																															
1	2	3	4	°C	°F	5	6	7	8	9	10	°C	°F	5	6	7	8	9	10	°C	°F	5	6	7	8	9	10	°C	°F	5	6	7	8	9	10	°C	°F
				0	32							100	212						●	75	167						●	210	410						●	475	887
●				-200	-328	●						0	32	●					●	80	176	●					●	220	428	●					●	500	932
	●			-175	-283		●					5	41		●				●	85	185		●				●	230	446		●				●	525	997
●	●			-150	-238	●	●					10	50	●	●				●	90	194	●	●				●	240	464	●	●				●	550	1022
		●		-125	-193			●				15	59			●			●	95	203			●			●	250	482			●			●	575	1067
●		●		-100	-148	●		●				20	68	●		●			●	100	212	●		●			●	260	500	●		●			●	600	1112
	●	●		-90	-130		●	●				25	77		●	●			●	110	230		●	●			●	270	518		●	●			●	625	1157
●	●	●		-80	-112	●	●	●				30	86	●	●	●			●	120	248	●	●	●			●	280	536	●	●	●			●	650	1202
			●	-70	-94				●			35	95				●		●	130	266				●		●	290	554				●	●	●	675	1247
●			●	-60	-76	●			●			40	104	●			●		●	140	284	●			●		●	300	572	●			●	●	●	700	1292
		●	●	-50	-58		●		●			45	113		●		●		●	150	302		●		●		●	325	617		●		●	●	●	725	1337
●	●		●	-40	-40	●	●		●			50	122	●	●		●		●	160	320	●	●		●		●	350	662	●	●		●	●	●	750	1382
		●	●	-30	-22			●	●			55	131			●	●		●	170	338			●	●		●	375	707			●	●	●	●	775	1427
●		●	●	-20	-4	●		●	●			60	140	●		●	●		●	180	356	●		●	●		●	400	752	●		●	●	●	●	800	1472
	●	●	●	-10	14		●	●	●			65	149		●	●	●		●	190	374		●	●	●		●	425	797		●	●	●	●	●	825	1517
●	●	●	●	0	32	●	●	●	●			70	158	●	●	●	●		●	200	392	●	●	●	●		●	450	842	●	●	●	●	●	●	850	1562

The minimum distance from the start temperature to the end temperature may not fall short of 50K degrees on the Celsius (C) scale or 122K degrees on the Fahrenheit (F) scale.

Short description:

WAGO's temperature signal conditioner records Pt100, Pt200, Pt500, and Pt1000 sensors, as well as resistors up to 4.5 kOhm, converting the temperature signal into a standard analog signal at the output.

Features:

- For Pt100, Pt200, Pt500 and Pt1000 sensors, as well as resistors up to 4.5 kOhm
- 2-, 3- and 4-wire connection technology
- Calibrated measurement range switching
- Detects a sensor wire break/short circuit
- Detects measurement range underflow/overflow
- Clipping capability for analog signal limitation to output end values
- 3-way electrical isolation with 2.5 kV test voltage

Continued on next page

Notes

Note	**Use shielded signal cables!** Only use shielded signal cables for analog input and output signals. This ensures the device maintains its specified accuracy and immunity to interference, even when external disturbances affect the signal cable.

Technical data

Configuration

Configuration options	DIP switch

Input

Input signal type	Pt sensors Resistance

Input (RTD sensors)

Sensor types (RTD)	Pt100 Pt200 Pt500 Pt1000
Sensor connection	2-wire; 3-wire; 4-wire (switchable)
Sensor power supply (RTD) max.	≤ 0.5 mA
Temperature measurement range (RTD)	-200 … +850 °C

Input (resistors)

Input range (resistor)	0 … 1 kΩ; 0 … 4.5 kΩ

Output (analog)

Output signal type	Current Voltage
Output signal (voltage)	0 … 5 V 1 … 5 V 0 … 10 V 2 … 10 V
Output signal (current)	0 … 10 mA 2 … 10 mA 0 … 20 mA 4 … 20 mA
Load impedance (voltage output)	≥ 2 kΩ
Load impedance (current output)	≤ 600 Ω

Signal Processing

Step response (typ.)	180 ms (2-wire) 360 ms (3-wire)

Measurement Error

Transmission error (typ.)	≤ 0.1 % at full measurement span
Transmission error for the set measurement range	≤ ((10 K/set measurement range [K]) + 0.1) %
Temperature coefficient	≤ 0.02 %/K

Power Supply

Power supply type	24 VDC
Nominal supply voltage U_S	24 VDC
Supply voltage range	±30 %
Current consumption at nominal supply voltage	≤ 40 mA

Safety and protection

Rated Voltage	300 V
Protection type	IP20

Test voltage

Test voltage (input/output/supply)	2.5 kVAC; 50 Hz; 1 min

Insulation coordination

Overvoltage category	II
Pollution degree	2
Insulation type (input/analog output/supply)	Functional insulation
Insulation type (adjacent devices)	Reinforced insulation (safe isolation)

 Continued on next page

Connection Data

Connection technology	Push-in CAGE CLAMP®
Solid conductor	0.08 … 2.5 mm² / 28 … 14 AWG
Fine-stranded conductor	0.34 … 2.5 mm² / 22 … 14 AWG
Strip length	9 … 10 mm / 0.35 … 0.39 inches

Physical data

Width	6 mm / 0.236 inches
Height	94 mm / 3.701 inches
Depth from upper-edge of DIN-rail	97.8 mm / 3.85 inches

Mechanical data

Mounting type	DIN-35 rail

Material data

Color	light gray
Insulation material (main housing)	Polyamide (PA66)
Flammability class per UL94	V0
Fire load	0.486 MJ
Weight	35.3 g

Environmental requirements

Ambient temperature (operation)	-25 … +70 °C
Ambient temperature (storage)	-40 … +85 °C
Temperature range of connection cable	≥ ($T_{ambient}$ + 25 K)
Relative humidity	5 … 95 % (no condensation permissible)
Operating altitude (max.)	2000 m

Standards and Specifications

Conformity marking	CE
EMC immunity to interference	EN 61000-6-2
EMC emission of interference	EN 61000-6-4
Standards/specifications	DNV

Commercial data

Product Group	6 (INTERFACE ELECTRONIC)
PU (SPU)	1 pcs
Packaging type	Bag
Country of origin	DE
GTIN	4045454470128
Customs tariff number	85437090300

 Continued on next page

Product Classification

UNSPSC	41112109
eCl@ss 10.0	27-21-01-29
eCl@ss 9.0	27-20-02-06
ETIM 9.0	EC002919
ETIM 10.0	EC002919
ECCN	NO US CLASSIFICATION

Environmental Product Compliance

CAS-No.	1303-86-2 1317-36-8 7439-92-1 75980-60-8 79-94-7
REACH Candidate List Substance	2,2',6,6'-tetrabromo-4,4'-isopropylidenediphenol Diboron trioxide Lead Lead monoxide Phosphine oxide, diphenyl(2,4,6-trimethylbenzoyl)-
RoHS Compliance Status	Compliant,With Exemption
RoHS Exemption	6(c) 7(a) 7(c)-I 7(c)-II
SCIP notification number (Austria)	18d0a87d-bb35-4b42-bba2-e1971d4739b1
SCIP notification number (Belgium)	1f2fe9d0-536a-4644-aa00-574d7a086709
SCIP notification number (Bulgaria)	6eb8b90b-e755-4cdf-9d9f-85f513b2f530
SCIP notification number (Czech Republic)	03108352-4dba-454f-a6f1-d4e09f8cc18d
SCIP notification number (Denmark)	26a58e4c-5504-4e78-9b49-eb746565ddd1
SCIP notification number (Finland)	4e48f299-96d8-4f28-9c0f-d3b571642d51
SCIP notification number (France)	13292952-78df-4879-8c6e-21dcd8da9daf
SCIP notification number (Germany)	4f8414b3-3970-470e-8a6d-e6b490c7716a
SCIP notification number (Hungary)	c7c0edf4-0baa-4704-bf79-5e09253a732b
SCIP notification number (Italy)	63af3c96-c94e-457c-94e9-0491f5c3e31f
SCIP notification number (Netherlands)	fe840f60-0242-44fe-9a9d-212ece7599cf
SCIP notification number (Poland)	ea6a54b1-1413-4f99-b8a2-510158b8a5d9
SCIP notification number (Romania)	202d51cb-6c22-4e4c-a67c-2542b8e82bd1
SCIP notification number (Sweden)	95ed46b3-c0f7-472f-987f-304709c7024f

Approvals / Certificates

General approvals

Approval	Standard	Certificate Name
EAC GZO Almaty Standart	TP TC 020/2011	EAC CoC 03081

Declarations of conformity and manufacturer's declarations

Approval	Standard	Certificate Name
EU-Declaration of Conformity WAGO GmbH & Co. KG	-	-

 Continued on next page

Approvals for marine applications

Approval	Standard	Certificate Name
BV Bureau Veritas S.A.	Rules for class. of Steel Ships	40179_C0
DNV DNV Germany GmbH	DNV-CG-0339,Aug.2021	TAA00001D1

Approvals for hazardous areas

Approval	Standard	Certificate Name
CCC CNEX	CNCA-C23-01	2020312310000210 (Ex ec IIC T4 Gc)
IECEx TUEV Nord Cert GmbH	-	IECEX TUN14.0030X
UKEx WAGO GmbH & Co. KG	EN 60079-0	WAGO22UKEX004X
UL Underwriters Laboratories Inc. (HAZARDOUS LOCATIONS)	ANSI/ISA 12.12.01	E198726

Downloads

Environmental Product Compliance

Compliance Search

Environmental Product Compliance 857-800

Documentation

Manual

WAGO Temperature Signal Conditioners

Bid Text

857-800	19.02.2019	xml 5.96 KB	
857-800	20.02.2019	docx 16.85 KB	

Instruction Leaflet

CCC Ex (Additional information)	26.04.2023	pdf 140.99 KB	
Messumformer und Trennverstärker		pdf 2194.14 KB	

CAD/CAE-Data

CAD data

2D/3D Models 857-800

CAE data

EPLAN Data Portal 857-800

WSCAD Universe 857-800

ZUKEN Portal 857-800

Continued on next page

1 Compatible Products

1.1 Optional Accessories

1.1.1 Installation

1.1.1.1 Mounting accessories

Item No.: 249-117
Screwless end stop; 10 mm wide; for DIN-rail 35 x 15 and 35 x 7.5; gray

Item No.: 249-197
Screwless end stop; 14 mm wide; for DIN-rail 35 x 15 and 35 x 7.5; gray

Item No.: 249-116
Screwless end stop; 6 mm wide; for DIN-rail 35 x 15 and 35 x 7.5; gray

1.1.2 Interface module

1.1.2.1 Interface adapters

Item No.: 857-980
Interface adapter; 16-pole; analog

1.1.3 Jumper

1.1.3.1 Jumper

Item No.: 281-482
Jumper; 2-way; insulated; gray

Item No.: 859-410/000-006
Jumper; for jumper slot; 10-way; insulated; blue

Item No.: 859-410
Jumper; for jumper slot; 10-way; insulated; light gray

Item No.: 859-410/000-005
Jumper; for jumper slot; 10-way; insulated; red

Item No.: 859-410/000-029
Jumper; for jumper slot; 10-way; insulated; yellow

Item No.: 859-402/000-006
Jumper; for jumper slot; 2-way; insulated; blue

Item No.: 859-402
Jumper; for jumper slot; 2-way; insulated; light gray

Item No.: 859-402/000-005
Jumper; for jumper slot; 2-way; insulated; red

Item No.: 859-402/000-029
Jumper; for jumper slot; 2-way; insulated; yellow

Item No.: 859-403/000-006
Jumper; for jumper slot; 3-way; insulated; blue

Item No.: 859-403
Jumper; for jumper slot; 3-way; insulated; light gray

Item No.: 859-403/000-005
Jumper; for jumper slot; 3-way; insulated; red

Item No.: 859-403/000-029
Jumper; for jumper slot; 3-way; insulated; yellow

Item No.: 859-404/000-006
Jumper; for jumper slot; 4-way; insulated; blue

Item No.: 859-404
Jumper; for jumper slot; 4-way; insulated; light gray

Item No.: 859-404/000-005
Jumper; for jumper slot; 4-way; insulated; red

Item No.: 859-404/000-029
Jumper; for jumper slot; 4-way; insulated; yellow

Item No.: 859-405/000-006
Jumper; for jumper slot; 5-way; insulated; blue

Item No.: 859-405
Jumper; for jumper slot; 5-way; insulated; light gray

Item No.: 859-405/000-005
Jumper; for jumper slot; 5-way; insulated; red

Item No.: 859-405/000-029
Jumper; for jumper slot; 5-way; insulated; yellow

Item No.: 859-406/000-006
Jumper; for jumper slot; 6-way; insulated; blue

Item No.: 859-406
Jumper; for jumper slot; 6-way; insulated; light gray

Item No.: 859-406/000-005
Jumper; for jumper slot; 6-way; insulated; red

Item No.: 859-406/000-029
Jumper; for jumper slot; 6-way; insulated; yellow

Item No.: 859-407/000-006
Jumper; for jumper slot; 7-way; insulated; blue

Item No.: 859-407
Jumper; for jumper slot; 7-way; insulated; light gray

Item No.: 859-407/000-005
Jumper; for jumper slot; 7-way; insulated; red

 Continued on next page

1.1.3.1 Jumper

Item No.: 859-407/000-029
Jumper; for jumper slot; 7-way; insulated; yellow

Item No.: 859-408/000-006
Jumper; for jumper slot; 8-way; insulated; blue

Item No.: 859-408
Jumper; for jumper slot; 8-way; insulated; light gray

Item No.: 859-408/000-005
Jumper; for jumper slot; 8-way; insulated; red

Item No.: 859-408/000-029
Jumper; for jumper slot; 8-way; insulated; yellow

Item No.: 859-409/000-006
Jumper; for jumper slot; 9-way; insulated; blue

Item No.: 859-409
Jumper; for jumper slot; 9-way; insulated; light gray

Item No.: 859-409/000-005
Jumper; for jumper slot; 9-way; insulated; red

Item No.: 859-409/000-029
Jumper; for jumper slot; 9-way; insulated; yellow

1.1.4 Marking

1.1.4.1 Marker

Item No.: 793-5501
WMB marking card; as card; for terminal block width 5 - 17.5 mm; stretchable 5 - 5.2 mm; plain; snap-on type; white

Item No.: 793-502
WMB marking card; as card; MARKED; 1 ... 10 (10x); not stretchable; Horizontal marking; snap-on type; white

Item No.: 793-566
WMB marking card; as card; MARKED; 1 ... 50 (2x); not stretchable; Horizontal marking; snap-on type; white

Item No.: 793-503
WMB marking card; as card; MARKED; 11 ... 20 (10x); not stretchable; Horizontal marking; snap-on type; white

Item No.: 793-504
WMB marking card; as card; MARKED; 21 ... 30 (10x); not stretchable; Horizontal marking; snap-on type; white

Item No.: 793-505
WMB marking card; as card; MARKED; 31 ... 40 (10x); not stretchable; Horizontal marking; snap-on type; white

Item No.: 793-506
WMB marking card; as card; MARKED; 41 ... 50 (10x); not stretchable; Horizontal marking; snap-on type; white

Item No.: 793-501
WMB marking card; as card; not stretchable; plain; snap-on type; white

Item No.: 2009-115
WMB-Inline; for Smart Printer; 1500 pieces on roll; stretchable 5 - 5.2 mm; plain; snap-on type; white

1.1.4.2 Marking strip

Item No.: 2009-110
Marking strips; for Smart Printer; on reel; not stretchable; plain; snap-on type; white

1.1.5 Power supply

1.1.5.1 Power Supply

Item No.: 787-2852
Switched-mode power supply; 1-phase; 24 VDC output voltage; 1 A output current

 Continued on next page

1.1.6 Terminal blocks

1.1.6.1 Supply and through module

Item No.: 857-979
Supply and through module

1.1.7 Tool

1.1.7.1 Operating tool

Item No.: 210-720
Operating tool; Blade: 3.5 x 0.5 mm; with a partially insulated shaft; multicoloured

Installation Notes

Configuring

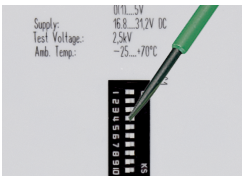

Configuration via DIP switch

Commoning

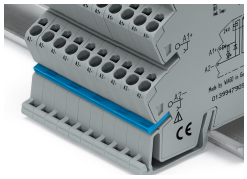

Commoning, not discrete wiring – Same out-line allows use of a single in-line, push-in jumper.