Data Sheet | Item Number: 857-728

Solid-state relay module; Nominal input voltage: 230 V AC/DC; Output voltage range: 0 ... 30 VDC; Limiting continuous current: 3 A; 2-wire connection; Yellow status indicator; Module width: 6 mm; gray

https://www.wago.com/857-728

Color: gray

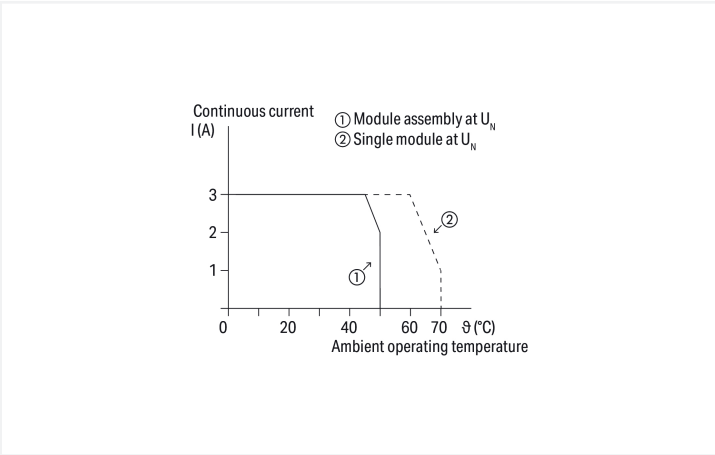

Current-carrying capacity curve

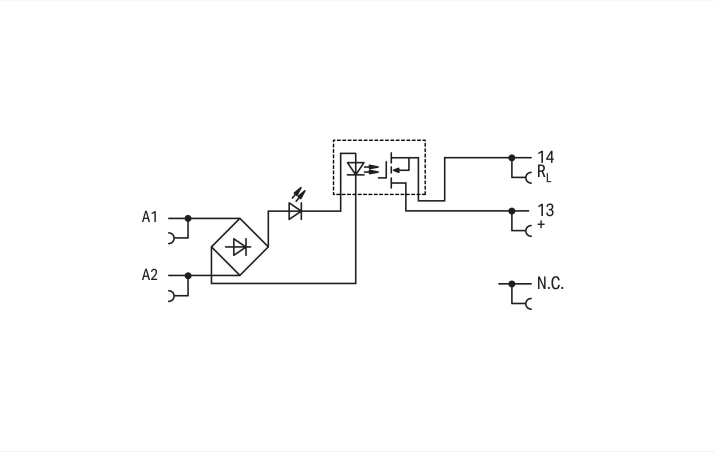

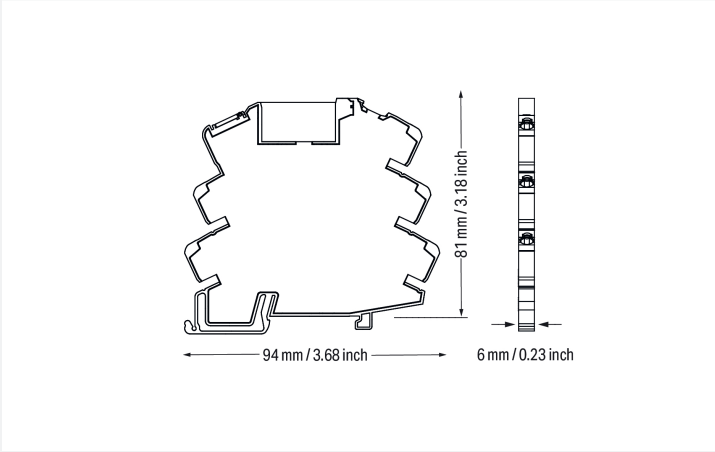

Technical data

Control circuit

Nominal input voltage U_N	230 VAC/VDC
Input voltage range (low level)	0 ... 60 VAC/VDC
Input voltage range (high level)	200 ... 253 VAC/DC
Nominal input current at U_N	4 mA

Load circuit

Circuit type	2-wire connection
Limiting continuous current	3 A
Inrush current (resistive) max.	(AC) 15 A / 0.01 s
Nominal output voltage	24 VDC
Output voltage range	0 ... 30 VDC
Voltage drop	≤ 0.12 VDC
Leakage current at rated voltage	≤ 1 µA
Switching current (min.)	50 µA
Turn-on time	≤ 4.5 ms
Turn-off time	≤ 10 ms
Switching frequency	≤ 20 Hz

Continued on next page

Signaling

Status indicator	Yellow LED

Safety and protection

Rated Voltage	300 V
Overvoltage category	III
Pollution degree	2
Dielectric strength (control/load circuit) (AC, 1 min)	3.51 kVrms
Insulation type (control/load circuit)	Basic insulation
Insulation type (between adjacent devices of the same type)	Reinforced insulation (safe isolation)
Insulation type (to adjacent devices of different types)	Basic insulation
Protection type	IP20

Connection Data

Connection technology	Push-in CAGE CLAMP®
Solid conductor	0.34 … 2.5 mm² / 22 … 14 AWG
Fine-stranded conductor	0.34 … 2.5 mm² / 22 … 14 AWG
Fine-stranded conductor; with insulated ferrule	0.34 … 1.5 mm² / 22 … 16 AWG
Strip length	9 … 10 mm / 0.35 … 0.39 inches

Physical data

Width	6 mm / 0.236 inches
Height	94 mm / 3.701 inches
Depth from upper-edge of DIN-rail	81 mm / 3.189 inches

Mechanical data

Mounting type	DIN-35 rail
Mounting position	horizontal (standing/lying); vertical

Material data

Note (material data)	Information on material specifications can be found here
Color	gray
Insulation material (main housing)	Polyamide (PA66)
Material group	I
Flammability class per UL94	V0
Fire load	0.533 MJ
Weight	31 g

Environmental requirements

Ambient temperature (operation at U_N)	-20 … +70 °C
Ambient temperature (storage)	-40 … +70 °C
Processing temperature	-25 … +50 °C
Temperature range of connection cable	≥ ($T_{ambient}$ + 30 K)
Relative humidity	5 … 85 % (no condensation permissible)
Operating altitude (max.)	2000 m

Continued on next page

Standards and Specifications

Standards/specifications	EN 61000-6-2 EN 61000-6-3 EN 61373 EN 61010-2-201 UL 508

Basic relay

WAGO Basic Relay	857-162

Commercial data

Product Group	6 (INTERFACE ELECTRONIC)
PU (SPU)	25 (1) pcs
Packaging type	Box
Country of origin	DE
GTIN	4045454835484
Customs tariff number	85365005000

Product Classification

UNSPSC	39122334
eCl@ss 10.0	27-26-15-03
eCl@ss 9.0	27-26-15-03
ETIM 9.0	EC001504
ETIM 10.0	EC001504
ECCN	NO US CLASSIFICATION

Environmental Product Compliance

CAS-No.	7439-92-1 79-94-7
REACH Candidate List Substance	2,2',6,6'-tetrabromo-4,4'-isopropylidenediphenol Lead
RoHS Compliance Status	Compliant,With Exemption
RoHS Exemption	7(c)-I
SCIP notification number (Bulgaria)	a11ddb13-73a2-402f-8c62-084e7ef393df
SCIP notification number (Czech Republic)	f2e0ce4a-21ae-46f0-98e1-8a5e410776af

Approvals / Certificates

General approvals

Approval	Standard	Certificate Name
EAC GZO Almaty Standart	TP TC 004/2011	EAC CoC 03078
UL Underwriters Laboratories Inc. (ORDINARY LOCATIONS)	UL 508	E175199 Sec.4

Approvals for hazardous areas

Approval	Standard	Certificate Name
ATEX DEKRA EXAM GmbH	EN 60079-0	BVS_14_ATEX_E_091_X (II 3G Ex ec nC IIC T4 Gc; II 3G Ex ec IIC T4 Gc)
CCC CNEX	CNCA-C23-01	2020312304000757 (Ex ec IIC T4 Gc)
IECEx DEKRA EXAM GmbH	IEC 60079-0	IECEX_BVS_14.0079X_Issue_3 (Ex ec nC IIC T4 Gc; Ex ec IIC T4 Gc)
UKEx WAGO GmbH & Co. KG	EN 60079-0	WAGO22UKEX002X_ec

 Continued on next page

Downloads

Environmental Product Compliance

Compliance Search

Environmental Product Compliance 857-728

Documentation

Bid Text

857-728	19.02.2019	xml 4.13 KB	
857-728	20.02.2019	docx 16.36 KB	

Instruction Leaflet

CCC Ex (Additional information)	26.04.2023	pdf 129.88 KB	
Elektromechanical and Solid-State Relays/Optocouplers	V 2.0.0 15.02.2022	pdf 2352.42 KB	

CAD/CAE-Data

CAD data

2D/3D Models 857-728

CAE data

EPLAN Data Portal 857-728

WSCAD Universe 857-728

ZUKEN Portal 857-728

1 Compatible Products

1.1 Optional Accessories

1.1.1 Basic relay

1.1.1.1 Basic solid-state relay

Item No.: 857-162
Basic solid-state relay; Nominal input voltage: 60 VDC; Output voltage range: 0 ... 24 VDC; Limiting continuous current: 3 A

1.1.2 Ferrule

1.1.2.1 Ferrule

Item No.: 216-241
Ferrule; Sleeve for 0.5 mm² / 20 AWG; insulated; electro-tin plated; electrolytic copper; gastight crimped; acc. to DIN 46228, Part 4/09.90; white

Item No.: 216-242
Ferrule; Sleeve for 0.75 mm² / 18 AWG; insulated; electro-tin plated; electrolytic copper; gastight crimped; acc. to DIN 46228, Part 4/09.90; gray

Item No.: 216-243
Ferrule; Sleeve for 1 mm² / AWG 18; insulated; electro-tin plated; electrolytic copper; gastight crimped; acc. to DIN 46228, Part 4/09.90; red

Item No.: 216-244
Ferrule; Sleeve for 1.5 mm² / AWG 16; insulated; electro-tin plated; electrolytic copper; gastight crimped; acc. to DIN 46228, Part 4/09.90; black

Continued on next page

1.1.3 Jumper

1.1.3.1 Jumper

Item No.: 281-482
Jumper; 2-way; insulated; gray

Item No.: 859-410/000-006
Jumper; for jumper slot; 10-way; insulated; blue

Item No.: 859-410
Jumper; for jumper slot; 10-way; insulated; light gray

Item No.: 859-410/000-005
Jumper; for jumper slot; 10-way; insulated; red

Item No.: 859-410/000-029
Jumper; for jumper slot; 10-way; insulated; yellow

Item No.: 859-402/000-006
Jumper; for jumper slot; 2-way; insulated; blue

Item No.: 859-402
Jumper; for jumper slot; 2-way; insulated; light gray

Item No.: 859-402/000-005
Jumper; for jumper slot; 2-way; insulated; red

Item No.: 859-402/000-029
Jumper; for jumper slot; 2-way; insulated; yellow

Item No.: 859-403/000-006
Jumper; for jumper slot; 3-way; insulated; blue

Item No.: 859-403
Jumper; for jumper slot; 3-way; insulated; light gray

Item No.: 859-403/000-005
Jumper; for jumper slot; 3-way; insulated; red

Item No.: 859-403/000-029
Jumper; for jumper slot; 3-way; insulated; yellow

Item No.: 859-404/000-006
Jumper; for jumper slot; 4-way; insulated; blue

Item No.: 859-404
Jumper; for jumper slot; 4-way; insulated; light gray

Item No.: 859-404/000-005
Jumper; for jumper slot; 4-way; insulated; red

Item No.: 859-404/000-029
Jumper; for jumper slot; 4-way; insulated; yellow

Item No.: 859-405/000-006
Jumper; for jumper slot; 5-way; insulated; blue

Item No.: 859-405
Jumper; for jumper slot; 5-way; insulated; light gray

Item No.: 859-405/000-005
Jumper; for jumper slot; 5-way; insulated; red

Item No.: 859-405/000-029
Jumper; for jumper slot; 5-way; insulated; yellow

Item No.: 859-406/000-006
Jumper; for jumper slot; 6-way; insulated; blue

Item No.: 859-406
Jumper; for jumper slot; 6-way; insulated; light gray

Item No.: 859-406/000-005
Jumper; for jumper slot; 6-way; insulated; red

Item No.: 859-406/000-029
Jumper; for jumper slot; 6-way; insulated; yellow

Item No.: 859-407/000-006
Jumper; for jumper slot; 7-way; insulated; blue

Item No.: 859-407
Jumper; for jumper slot; 7-way; insulated; light gray

Item No.: 859-407/000-005
Jumper; for jumper slot; 7-way; insulated; red

Item No.: 859-407/000-029
Jumper; for jumper slot; 7-way; insulated; yellow

Item No.: 859-408/000-006
Jumper; for jumper slot; 8-way; insulated; blue

Item No.: 859-408
Jumper; for jumper slot; 8-way; insulated; light gray

Item No.: 859-408/000-005
Jumper; for jumper slot; 8-way; insulated; red

Item No.: 859-408/000-029
Jumper; for jumper slot; 8-way; insulated; yellow

Item No.: 859-409/000-006
Jumper; for jumper slot; 9-way; insulated; blue

Item No.: 859-409
Jumper; for jumper slot; 9-way; insulated; light gray

Item No.: 859-409/000-005
Jumper; for jumper slot; 9-way; insulated; red

Item No.: 859-409/000-029
Jumper; for jumper slot; 9-way; insulated; yellow

Continued on next page

1.1.4 Marking

1.1.4.1 Double marker carrier

Item No.: 209-128
Adaptor; gray

1.1.4.2 Group marker carrier

Item No.: 249-105
Group marker carrier; gray

1.1.4.3 Marker

Item No.: 209-183
Marker; white

Item No.: 793-5501
WMB marking card; as card; for terminal block width 5 - 17.5 mm; stretchable 5 - 5.2 mm; plain; snap-on type; white

Item No.: 793-502
WMB marking card; as card; MARKED; 1 ... 10 (10x); not stretchable; Horizontal marking; snap-on type; white

Item No.: 793-566
WMB marking card; as card; MARKED; 1 ... 50 (2x); not stretchable; Horizontal marking; snap-on type; white

Item No.: 793-503
WMB marking card; as card; MARKED; 11 ... 20 (10x); not stretchable; Horizontal marking; snap-on type; white

Item No.: 793-504
WMB marking card; as card; MARKED; 21 ... 30 (10x); not stretchable; Horizontal marking; snap-on type; white

Item No.: 793-505
WMB marking card; as card; MARKED; 31 ... 40 (10x); not stretchable; Horizontal marking; snap-on type; white

Item No.: 793-506
WMB marking card; as card; MARKED; 41 ... 50 (10x); not stretchable; Horizontal marking; snap-on type; white

Item No.: 793-501
WMB marking card; as card; not stretchable; plain; snap-on type; white

Item No.: 2009-115
WMB-Inline; for Smart Printer; 1500 pieces on roll; stretchable 5 - 5.2 mm; plain; snap-on type; white

1.1.4.4 Marking device

Item No.: 210-110
Fiber-tip pen

1.1.4.5 Marking strip

Item No.: 2009-110
Marking strips; for Smart Printer; on reel; not stretchable; plain; snap-on type; white

1.1.4.6 Protective marker cover

Item No.: 209-184
Protection cover; transparent

 Continued on next page

1.1.5 Tool

1.1.5.1 Operating tool

Item No.: 210-720
Operating tool; Blade: 3.5 x 0.5 mm; with a partially insulated shaft; multicoloured

Installation Notes

Conductor termination

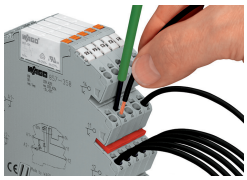

Conductor termination

Commoning

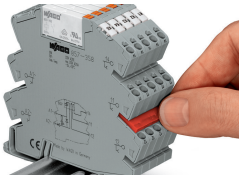

Easy commoning using adjacent jumpers

Marking

Marking via WMB Multi Marking System.

Installation

Removing a relay via ejector.