Data Sheet | Item Number: 852-201/107-030

SFP Module 100BASE; LX Single-Mode 1310 nm LC; 30 km; silver-colored

https://www.wago.com/852-201/107-030

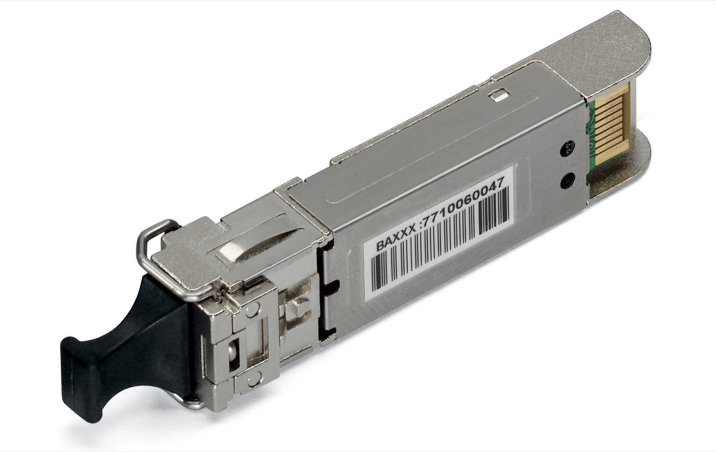

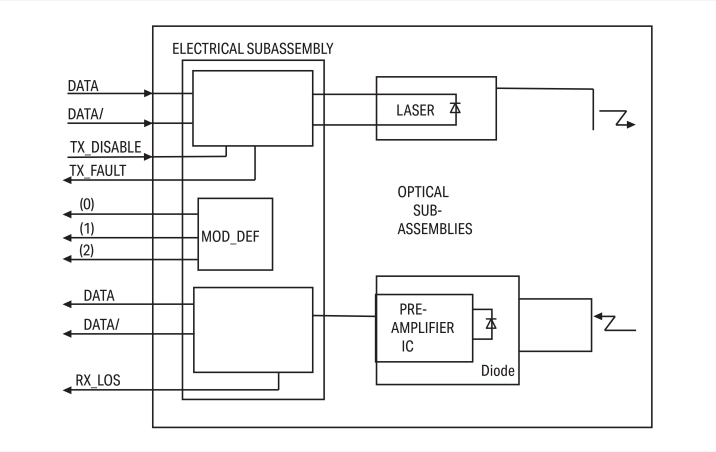

Color: silver-colored

Similar to illustration

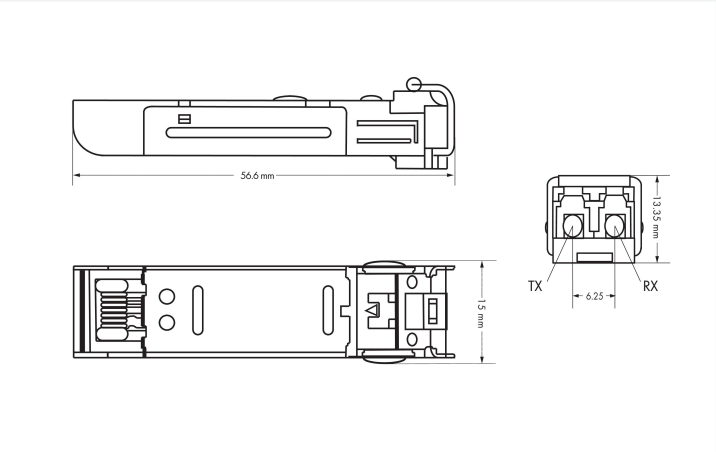

Dimensions in mm

Features:

- Duplex LC optical connector
- Small Form-Factor Pluggable (SFP) industry-standard design
- Compliant with Fast ETHERNET standard
- Differential LVPECL inputs and outputs
- Power supply: 3.3 V
- TTL signal detect indicator
- Hot-pluggable capability

Technical data

Optical fiber type	Single-mode

Connection Data

Connection technology: communication/fieldbus	1 x SFP; LC fiber-optic connector
Connection requirement (permissible cable length)	30000 m
Connection requirement (permissible cable type)	Single-mode fiber 9/125 µm; Wavelength: 1310 nm

Physical data

Width	13.4 mm / 0.528 inches
Height	13.3 mm / 0.524 inches
Depth	56.6 mm / 2.228 inches

Material data

Color	silver-colored
Weight	25.5 g

Environmental requirements

Ambient temperature (operation)	0 … +60 °C
Ambient temperature (storage)	-20 … +80 °C

Commercial data

PU (SPU)	1 pcs
Packaging type	Box
Country of origin	TW
GTIN	4045454635411
Customs tariff number	85176200000

Product Classification

UNSPSC	43201553
eCl@ss 10.0	19-17-01-30
eCl@ss 9.0	19-17-01-06
ETIM 9.0	EC000309
ETIM 10.0	EC000309
ECCN	NO US CLASSIFICATION

Environmental Product Compliance

RoHS Compliance Status	Compliant,No Exemption

 Continued on next page

Approvals / Certificates

General approvals

Approval	Standard	Certificate Name
EAC GZO Almaty Standart	TP TC 020/2011	EAC CoC 03083
KC National Radio Research Agency	Article 58-2, Clause 3	MSIP-REM-W43-SFP852

Declarations of conformity and manufacturer's declarations

Approval	Standard	Certificate Name
EU-Declaration of Conformity WAGO GmbH & Co. KG	-	-

Downloads

Environmental Product Compliance

Compliance Search

Environmental Product Compliance
852-201/107-030

Documentation

System Description

Industrial Switches – General Product Information	pdf 1873.93 KB	

Bid Text

852-201/107-030	19.02.2019	xml 3.78 KB	
852-201/107-030	09.03.2018	doc 26.50 KB	
ausschreiben.de 852-201/107-030			

CAD/CAE-Data

CAE data

EPLAN Data Portal
852-201/107-030

WSCAD Universe
852-201/107-030