Data Sheet | Item Number: 788-102

Relay socket; 2 changeover contacts; for 15 mm basic relays; gray

https://www.wago.com/788-102

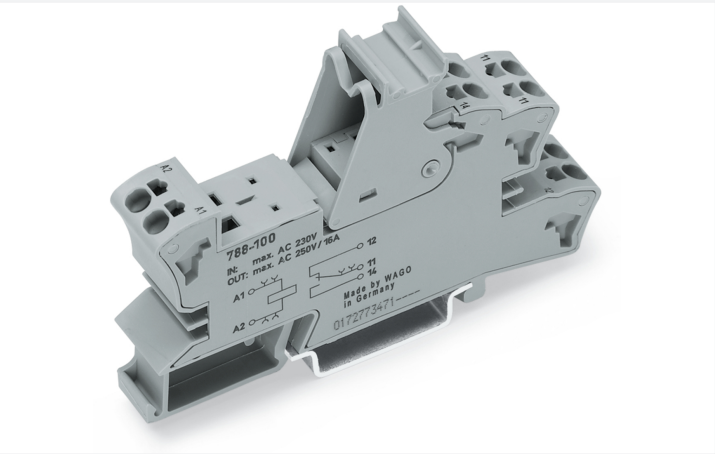

Color: gray

Similar to illustration

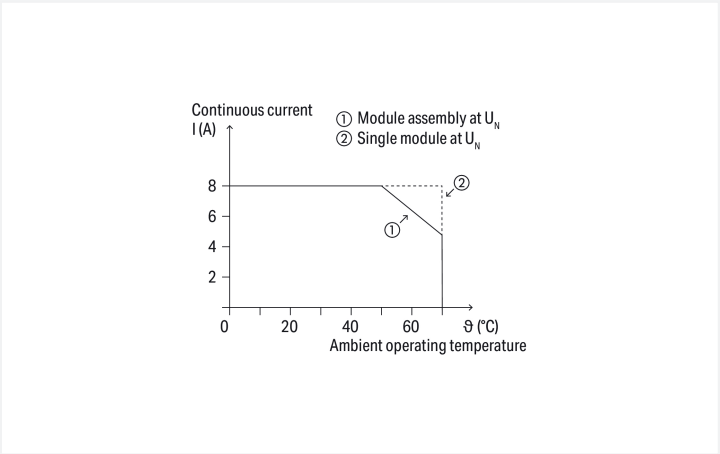

Current-carrying capacity curve

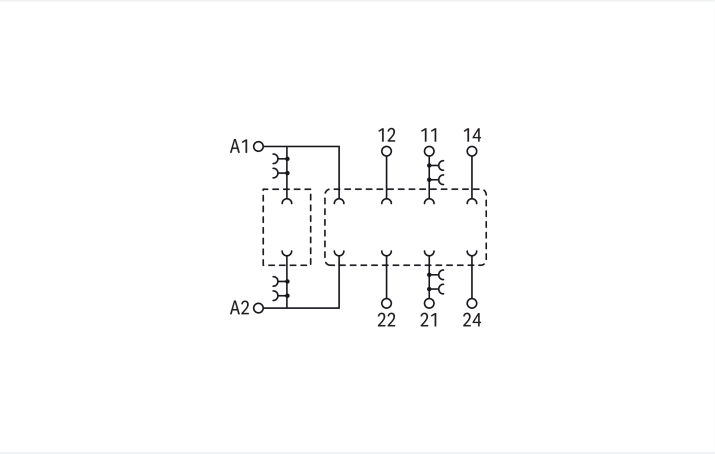

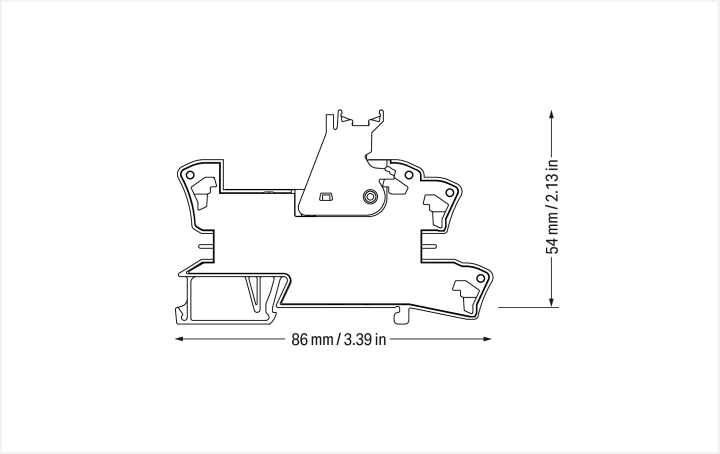

Notes

Note	The specified technical data are maximum values. They may be limited by the accessories used.

Technical data

Control circuit

Nominal input voltage U_N	230 VAC/VDC
Input voltage range	0 ... 250 VAC/VDC
Nominal frequency range	50 ... 60 Hz

Load circuit

Number of changeover/switchover contacts	2
Limiting continuous current	8 A
Switching Voltage, Max.	300 VAC
Nominal frequency range	≤60 Hz

Continued on next page

Safety and protection

Rated Voltage	300 V
Overvoltage category	II
Pollution degree	3
Dielectric strength (control/load circuit) (AC, 1 min)	3.6 kVrms
Dielectric strength (open contact) (AC, 1 min)	1 kVrms
Insulation type (control/load circuit)	Reinforced insulation (safe isolation)
Insulation type (load/load circuit)	Basic insulation
Insulation type (between adjacent devices of the same type)	Basic insulation
Protection type	IP20

Connection Data

Connection technology	Push-in CAGE CLAMP®
Solid conductor	0.34 … 2.5 mm² / 22 … 14 AWG
Fine-stranded conductor	0.34 … 2.5 mm² / 22 … 14 AWG
Strip length	9 … 10 mm / 0.35 … 0.39 inches

Physical data

Width	15 mm / 0.591 inches
Height	86 mm / 3.386 inches
Depth from upper-edge of DIN-rail	54 mm / 2.126 inches

Mechanical data

Mounting type	DIN-35 rail

Material data

Note (material data)	Information on material specifications can be found here
Color	gray
Fire load	0.57 MJ
Weight	30.7 g
Relative temperature index for plastic (RTI per UL)	105 °C

Environmental requirements

Ambient temperature (operation at U_N)	-40 … +70 °C
Ambient temperature (storage)	-40 … +80 °C
Processing temperature	-25 … +50 °C
Temperature range of connection cable	≥ ($T_{ambient}$ + 20 K)
Relative humidity	5 … 95 % (no condensation permissible)
Operating altitude (max.)	2000 m

Standards and Specifications

Standards/specifications	EN 61010-2-201

 Continued on next page

Commercial data

Product Group	6 (INTERFACE ELECTRONIC)
PU (SPU)	20 (1) pcs
Packaging type	Box
Country of origin	CN
GTIN	4050821591788
Customs tariff number	85366990990

Product Classification

UNSPSC	39122335
eCl@ss 10.0	27-37-16-03
eCl@ss 9.0	27-37-16-03
ETIM 9.0	EC001456
ETIM 10.0	EC001456
ECCN	NO US CLASSIFICATION

Environmental Product Compliance

RoHS Compliance Status	Compliant,No Exemption

Approvals / Certificates

General approvals

Approval	Standard	Certificate Name
EAC GZO Almaty Standart	TP TC 004/2011	EAC CoC 03084

Declarations of conformity and manufacturer's declarations

Approval	Standard	Certificate Name
EU-Declaration of Conformity WAGO GmbH & Co. KG	-	-
UK-Declaration of Conformity WAGO GmbH & Co. KG	-	-

Downloads

Environmental Product Compliance

Compliance Search

Environmental Product Compliance 788-102

Documentation

Bid Text

788-102	19.02.2019	xml 3.61 KB	
788-102	20.02.2019	docx 16.15 KB	

Instruction Leaflet

Sockets with Elementary Relay/ SSR	V 1.0.1 09.10.2020	pdf 2271.22 KB	

 Continued on next page

CAD/CAE-Data

CAD data	CAE data
2D/3D Models 788-102	EPLAN Data Portal 788-102
	WSCAD Universe 788-102
	ZUKEN Portal 788-102

1 Compatible Products

1.1 Optional Accessories

1.1.1 Basic relay

1.1.1.1 Basic relay

Item No.: 788-152
Basic relay; Nominal input voltage: 12 VDC; 2 changeover contacts; Limiting continuous current: 8 A; Module width: 13 mm; Module height: 15 mm

Item No.: 788-180
Basic relay; Nominal input voltage: 230 VAC; 2 changeover contacts; Limiting continuous current: 8 A; Module width: 13 mm; Module height: 15 mm

1.1.2 Ferrule

1.1.2.1 Ferrule

Item No.: 216-241
Ferrule; Sleeve for 0.5 mm² / 20 AWG; insulated; electro-tin plated; electrolytic copper; gastight crimped; acc. to DIN 46228, Part 4/09.90; white

Item No.: 216-242
Ferrule; Sleeve for 0.75 mm² / 18 AWG; insulated; electro-tin plated; electrolytic copper; gastight crimped; acc. to DIN 46228, Part 4/09.90; gray

Item No.: 216-243
Ferrule; Sleeve for 1 mm² / AWG 18; insulated; electro-tin plated; electrolytic copper; gastight crimped; acc. to DIN 46228, Part 4/09.90; red

Item No.: 216-244
Ferrule; Sleeve for 1.5 mm² / AWG 16; insulated; electro-tin plated; electrolytic copper; gastight crimped; acc. to DIN 46228, Part 4/09.90; black

Item No.: 216-542
Twin ferrule; Sleeve for 2 x 1 mm² / AWG 2 x 18; red, insulated; 12 mm long; red

1.1.3 Filter module

1.1.3.1 Suppressor module

Item No.: 788-148
Filter module; RC filter element; Nominal voltage: 230 VAC

 Continued on next page

1.1.4 Indicators

1.1.4.1 Status indication

Item No.: 788-125
Accessories for relay modules; Operation status indicator: red

Item No.: 788-121
Accessories for relay modules; Operation status indicator: red; Nominal operating voltage range: 48 … 60 VDC

Item No.: 788-122
Accessories for relay modules; Operation status indicator: red; Nominal operating voltage: 110 VDC

Item No.: 788-124
Accessories for relay modules; Operation status indicator: red; Nominal operating voltage: 115 VAC

Item No.: 788-123
Accessories for relay modules; Operation status indicator: red; Nominal operating voltage: 24 VAC

Item No.: 788-120
Accessories for relay modules; Operation status indicator: red; Nominal operating voltage: 24 VDC

1.1.5 Jumper

1.1.5.1 Jumper

Item No.: 788-118
Jumper; for jumper slot; 2-way; from 1 to 3; insulated; light gray

Item No.: 788-113
Jumper; for jumper slot; 2-way; insulated; light gray

Item No.: 859-402
Jumper; for jumper slot; 2-way; insulated; light gray

Item No.: 788-114
Jumper; for jumper slot; 3-way; insulated; light gray

Item No.: 788-115
Jumper; for jumper slot; 4-way; insulated; light gray

Item No.: 788-116
Jumper; for jumper slot; 6-way; insulated; light gray

Item No.: 788-117
Jumper; for jumper slot; 8-way; insulated; light gray

1.1.6 Marking

1.1.6.1 Double marker carrier

Item No.: 209-128
Adaptor; gray

1.1.6.2 Group marker carrier

Item No.: 249-105
Group marker carrier; gray

Item No.: 209-145
Group marker carrier; white

1.1.6.3 Marker

Item No.: 209-183
Marker; white

Item No.: 793-502
WMB marking card; as card; MARKED; 1 … 10 (10x); not stretchable; Horizontal marking; snap-on type; white

Item No.: 793-503
WMB marking card; as card; MARKED; 11 … 20 (10x); not stretchable; Horizontal marking; snap-on type; white

Item No.: 793-504
WMB marking card; as card; MARKED; 21 … 30 (10x); not stretchable; Horizontal marking; snap-on type; white

Item No.: 793-505
WMB marking card; as card; MARKED; 31 … 40 (10x); not stretchable; Horizontal marking; snap-on type; white

Item No.: 793-501
WMB marking card; as card; not stretchable; plain; snap-on type; white

Item No.: 2009-115
WMB-Inline; for Smart Printer; 1500 pieces on roll; stretchable 5 - 5.2 mm; plain; snap-on type; white

 Continued on next page

1.1.6.4 Marking device

Item No.: 210-110
Fiber-tip pen

1.1.6.5 Marking strip

Item No.: 2009-110
Marking strips; for Smart Printer; on reel; not stretchable; plain; snap-on type; white

1.1.6.6 Protective marker cover

Item No.: 209-184
Protection cover; transparent

1.1.7 Tool

1.1.7.1 Operating tool

Item No.: 210-720
Operating tool; Blade: 3.5 x 0.5 mm; with a partially insulated shaft; multicoloured