Data Sheet | Item Number: 753-440

4-channel digital input; 120/230 VAC

https://www.wago.com/753-440

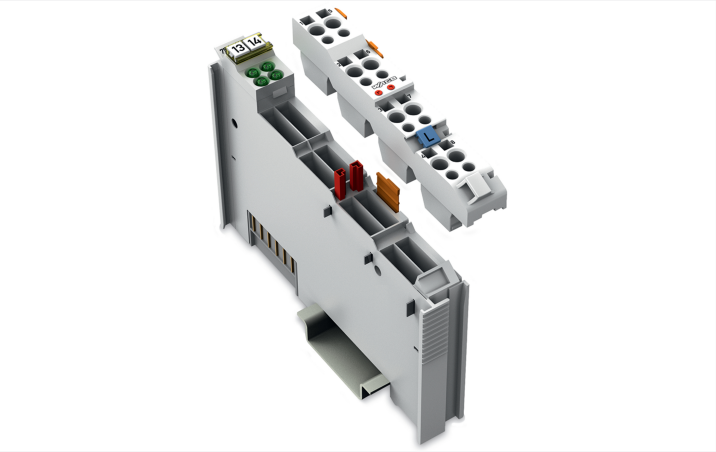

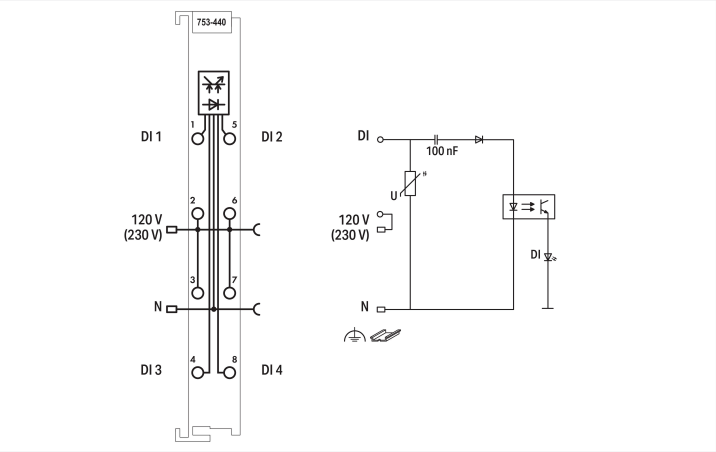

Color: light gray

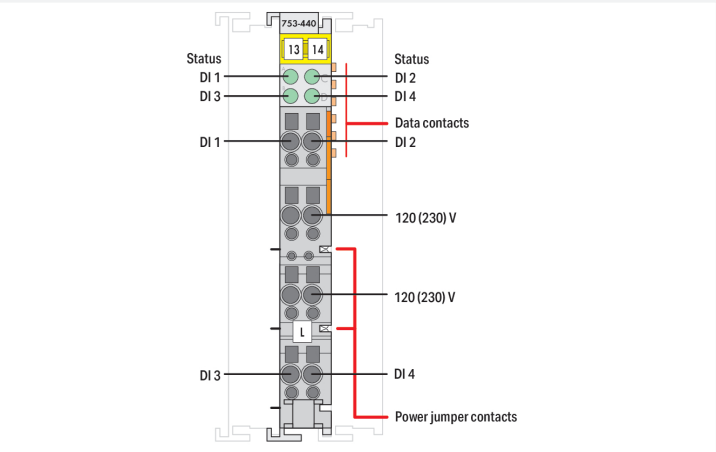

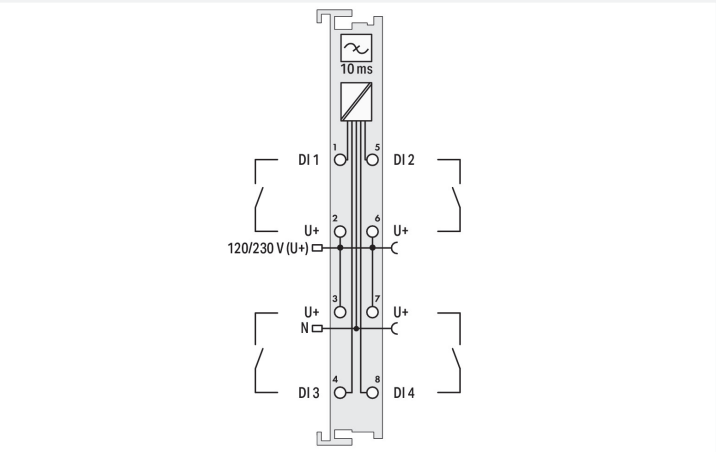

This digital input module receives control signals from field devices (e.g., sensors).
The module has four input channels and directly connects to four 2-wire sensors.
Field and system levels are electrically isolated.**Notice:**
An additional supply module must be added for 120 (230) VAC supply!

Notes	
Note	Pluggable connectors and coding fingers (753 Series) are not included.

Technical data	
Number of digital inputs	4
Total number of channels (module)	4
Signal type	Digital
Signal type (voltage)	120 VAC
Sensor supply	230 VAC
Sensor connection	4 x (2-wire)
Input characteristic	high-side switching
Input filter	10 ms
Voltage range for signal (0)	0 … 40 VAC
Voltage range for signal (1)	79 … 230 VAC (–15 … +10 %)

 Continued on next page

Technical data

Signal frequency (min.)	45 Hz
Signal frequency (max.)	65 Hz
Input data width (internal) max.	4 bits
Supply voltage (system)	5 VDC; via data contacts
Current consumption (system supply)	15 mA
Supply voltage (field)	230 VAC; via power jumper contacts (power supply via blade contact; transmission (field side supply voltage only) via spring contact)
Protection against incorrect wiring	Overvoltage protection (275 V) via varistor
Indicators	LED (A-D) green: Status DI 1 ... DI 4
Number of incoming power jumper contacts	2
Number of outgoing power jumper contacts	2
Current carrying capacity (power jumper contacts)	10 A

Safety and protection

Protection type	IP20
Pollution degree	2 per IEC 61131-2
Isolation	1500 V (system/field)

Connection Data

Connection technology: I/O	8 x CAGE CLAMP® (inputs)
Connectable conductor materials	Copper
Connection type	Input
Solid conductor	0.08 ... 2.5 mm² / 28 ... 14 AWG
Fine-stranded conductor	0.08 ... 2.5 mm² / 28 ... 14 AWG
Strip length	9 ... 10 mm / 0.35 ... 0.39 inches

Physical data

Width	12 mm / 0.472 inches
Height	100 mm / 3.937 inches
Depth	69.8 mm / 2.748 inches
Depth from upper-edge of DIN-rail	62.6 mm / 2.465 inches

Mechanical data

Mounting type	DIN-35 rail
Pluggable connector	pluggable

Material data

Color	light gray
Housing material	Polycarbonate; polyamide 6.6
Fire load	1.408 MJ
Weight	42.5 g
Conformity marking	CE

 Continued on next page

Environmental requirements

Ambient temperature (operation)	0 … +55 °C
Ambient temperature (storage)	-40 … +85 °C
Operating altitude	0 … 2000 m / 0 … 6562 ft
Mounting position	Horizontal left, horizontal right, horizontal top, horizontal bottom, vertical top and vertical bottom
Relative humidity (without condensation)	95 %
Vibration resistance	Per IEC 60068-2-6
Shock resistance	15g per IEC 60068-2-27
EMC immunity to interference	per EN 61000-6-2
EMC emission of interference	per EN 61000-6-4
Exposure to pollutants	per IEC 60068-2-42 and IEC 60068-2-43
Permissible H_2S contaminant concentration at a relative humidity 75 %	10 ppm
Permissible SO_2 contaminant concentration at a relative humidity 75 %	25 ppm

Commercial data

Product Group	15 (I/O System)
PU (SPU)	1 pcs
Packaging type	Box
Country of origin	DE
GTIN	4045454394455
Customs tariff number	85176200000

Product Classification

UNSPSC	32151705
eCl@ss 10.0	27-24-26-04
eCl@ss 9.0	27-24-26-04
ETIM 9.0	EC001599
ETIM 10.0	EC001599
ECCN	NO US CLASSIFICATION

Environmental Product Compliance

RoHS Compliance Status	Compliant,No Exemption

Approvals / Certificates

General approvals

Approval	Standard	Certificate Name
EAC GZO Almaty Standart	TP TC 020/2011	EAC CoC 03083
EAC GZO Almaty Standart	TP TC 004/2011	EAC CoC 03084
KC National Radio Research Agency	Article 58-2, Clause 3	MSIP-REM-W43-DIM750
UL Underwriters Laboratories Inc. (ORDINARY LOCATIONS)	UL 508	E175199

Approvals for hazardous areas

Approval	Standard	Certificate Name
ATEX TUEV Nord Cert GmbH	EN 60079-0	TUEV14ATEX148929X (II 3 G Ex ec IIC T4 Gc)
CCCEx CQST/CNEx	CNCA-C23-01	2020312310000213 (Ex ec IIC T4 Gc)
IECEx TUEV Nord Cert GmbH	IEC 60079-0	IECEx TUN 14.0035 X (Ex ec IIC T4 Gc)
INMETRO TÜV Rheinland do Brasil Ltda.	IEC 60079-0	TÜV 12.1297 X
UKEx WAGO GmbH & Co. KG	EN 60079-0	UKCA_WAGO22UKEX003X_ec
UL Underwriters Laboratories Inc. (HAZARDOUS LOCATIONS)	UL 121201	E198726

 Continued on next page

Downloads

Environmental Product Compliance

Compliance Search

Environmental Product Compliance 753-440	

Documentation

Manual

System Manual Series 750/753			
Product Manual 4-channel, 120/230VAC	V 1.1.0	pdf 2198.69 KB	

System Description

750/753 Series I/O-System – General Product Information	pdf 953.35 KB	
Overview on WAGO-I/O-SYSTEM 750 approvals	pdf 770.48 KB	

Bid Text

753-440	13.07.2017	doc 29.00 KB	
753-440	19.02.2019	xml 4.80 KB	
ausschreiben.de 753-440			

Instruction Leaflet

CCC Ex (Additional information)	26.04.2023	pdf 159.76 KB	

CAD/CAE-Data

CAD data

2D/3D Models 753-440

CAE data

EPLAN Data Portal 753-440
WSCAD Universe 753-440
ZUKEN Portal 753-440

1 Compatible Products

1.1 Required Accessories

1.1.1 Pluggable connector

1.1.1.1 Male connector/plug

Item No.: 753-110
Plug

 Continued on next page

1.2 Optional Accessories

1.2.1 DIN-rail

1.2.1.1 Mounting accessories

Item No.: 210-196
Aluminum carrier rail; 35 x 8.2 mm; 1.6 mm thick; 2 m long; unslotted; similar to EN 60715; silver-colored

Item No.: 210-198
Copper carrier rail; 35 x 15 mm; 2.3 mm thick; 2 m long; unslotted; according to EN 60715; copper-colored

Item No.: 210-197
Steel carrier rail; 35 x 15 mm; 1.5 mm thick; 2 m long; slotted; similar to EN 60715; silver-colored

Item No.: 210-114
Steel carrier rail; 35 x 15 mm; 1.5 mm thick; 2 m long; unslotted; similar to EN 60715; silver-colored

Item No.: 210-118
Steel carrier rail; 35 x 15 mm; 2.3 mm thick; 2 m long; unslotted; according to EN 60715; silver-colored

Item No.: 210-112
Steel carrier rail; 35 x 7.5 mm; 1 mm thick; 2 m long; slotted; according to EN 60715; "Hole width 25 mm; silver-colored

Item No.: 210-113
Steel carrier rail; 35 x 7.5 mm; 1 mm thick; 2 m long; unslotted; according to EN 60715; silver-colored

1.2.2 Marking

1.2.2.1 Group marker carrier

Item No.: 750-106
Group marker carrier

1.2.2.2 Marker

Item No.: 750-100
Marker card; as a DIN A4 sheet; plain

Item No.: 2009-145/000-006
Mini-WSB Inline; for Smart Printer; 1700 pieces on roll; stretchable 5 - 5.2 mm; plain; snap-on type; blue

Item No.: 2009-145/000-007
Mini-WSB Inline; for Smart Printer; 1700 pieces on roll; stretchable 5 - 5.2 mm; plain; snap-on type; gray

Item No.: 2009-145/000-023
Mini-WSB Inline; for Smart Printer; 1700 pieces on roll; stretchable 5 - 5.2 mm; plain; snap-on type; green

Item No.: 2009-145/000-012
Mini-WSB Inline; for Smart Printer; 1700 pieces on roll; stretchable 5 - 5.2 mm; plain; snap-on type; orange

Item No.: 2009-145/000-005
Mini-WSB Inline; for Smart Printer; 1700 pieces on roll; stretchable 5 - 5.2 mm; plain; snap-on type; red

Item No.: 2009-145/000-024
Mini-WSB Inline; for Smart Printer; 1700 pieces on roll; stretchable 5 - 5.2 mm; plain; snap-on type; violet

Item No.: 2009-145
Mini-WSB Inline; for Smart Printer; 1700 pieces on roll; stretchable 5 - 5.2 mm; plain; snap-on type; white

Item No.: 2009-145/000-002
Mini-WSB Inline; for Smart Printer; 1700 pieces on roll; stretchable 5 - 5.2 mm; plain; snap-on type; yellow

Item No.: 248-501/000-006
Mini-WSB marking card; as card; not stretchable; plain; snap-on type; blue

Item No.: 248-501/000-007
Mini-WSB marking card; as card; not stretchable; plain; snap-on type; gray

Item No.: 248-501/000-023
Mini-WSB marking card; as card; not stretchable; plain; snap-on type; green

Item No.: 248-501/000-017
Mini-WSB marking card; as card; not stretchable; plain; snap-on type; light green

Item No.: 248-501/000-012
Mini-WSB marking card; as card; not stretchable; plain; snap-on type; orange

Item No.: 248-501/000-005
Mini-WSB marking card; as card; not stretchable; plain; snap-on type; red

Item No.: 248-501/000-024
Mini-WSB marking card; as card; not stretchable; plain; snap-on type; violet

Item No.: 248-501
Mini-WSB marking card; as card; not stretchable; plain; snap-on type; white

Item No.: 248-501/000-002
Mini-WSB marking card; as card; not stretchable; plain; snap-on type; yellow

 Continued on next page

1.2.2.3 Marker carrier

Item No.: 750-103
Group marker carrier

1.2.3 Pluggable connector

1.2.3.1 Coding

Item No.: 753-150
753 Series coding elements

1.2.4 Shield termination

1.2.4.1 Shield clamping saddles

Item No.: 790-108
Shield clamping saddle; 11 mm wide; diameter of compatible conductor; 3 ... 8 mm

Item No.: 790-208
Shield clamping saddle; 12.4 mm wide; 3 ... 8 mm

Item No.: 790-116
Shield clamping saddle; 19 mm wide; diameter of compatible conductor; 7 ... 16 mm

Item No.: 790-216
Shield clamping saddle; 21.8 mm wide; 6 ... 16 mm

Item No.: 790-124
Shield clamping saddle; 27 mm wide; diameter of compatible conductor; 6 ... 24 mm

Item No.: 790-220
Shield clamping saddle; 30 mm wide; 6 ... 20 mm

Item No.: 790-140
Shield clamping saddle; diameter of compatible conductor

1.2.5 Supply module

1.2.5.1 Supply module

Item No.: 750-612
Power Supply; 0 ... 230 V AC/DC

Item No.: 750-615
Power Supply; 120 VAC; fuse holder

Item No.: 750-609
Power Supply; 230 VAC; fuse holder

Item No.: 750-611
Power Supply; 230 VAC; fuse holder; Diagnostics

1.2.6 System enclosure

1.2.6.1 System enclosure

Item No.: 850-825
IP65 enclosure; Aluminium (RAL 7032); WxHxD (160x100x160 mm); 9 x M12, 4 x M20

Item No.: 850-826
IP65 enclosure; Aluminium (RAL 7032); WxHxD (240x100x160 mm); 4 x M20, 4 x M16, 14 x M12 cable grip

Item No.: 850-827
IP65 enclosure; Aluminium (RAL 7032); WxHxD (320x100x160 mm); 4 x M20, 8 x M16, 17 x M12 cable grip

Item No.: 850-828
IP65 enclosure; Aluminium (RAL 7032); WxHxD (480x100x160 mm); 4 x M20, 10 x M16, 35 x M12 cable grip

Item No.: 850-826/002-000
IP65 enclosure; Aluminium (RAL 7035); WxHxD (240x100x160 mm); 4 x M20, 4 x M16, 14 x M12 cable grip

Item No.: 850-827/002-000
IP65 enclosure; Aluminium (RAL 7035); WxHxD (320x100x160 mm); 4 x M20, 8 x M16, 17 x M12 cable grip

Item No.: 850-828/002-000
IP65 enclosure; Aluminium (RAL 7035); WxHxD (480x100x160 mm); 4 x M20, 10 x M16, 35 x M12 cable grip

Item No.: 850-834
IP65 enclosure; Polyester (RAL 7032); WxHxD (164x100x164 mm); 9 x M12, 4 x M20

Item No.: 850-835
IP65 enclosure; Polyester (RAL 7032); WxHxD (244x100x164 mm); 4 x M20, 4 x M16, 14 x M12 cable grip

Item No.: 850-836
IP65 enclosure; Polyester (RAL 7032); WxHxD (324x100x164 mm); 4 x M20, 8 x M16, 17 x M12 cable grip

Item No.: 850-814/002-000
IP65 enclosure; Sheet steel (RAL 7035); WxHxD (200x120x200 mm); without flange plate

Item No.: 850-815/002-000
IP65 enclosure; Sheet steel (RAL 7035); WxHxD (300x120x200 mm); without flange plate

 Continued on next page

1.2.6.1 System enclosure

Item No.: 850-816/002-000
IP65 enclosure; Sheet steel (RAL 7035); WxHxD (400x120x200 mm); without flange plate

Item No.: 850-817/002-000
IP65 enclosure; Sheet steel (RAL 7035); WxHxD (600x120x200 mm); without flange plate