Data Sheet | Item Number: 750-670

Stepper Controller; RS-422/24 VDC; 20 mA

https://www.wago.com/750-670

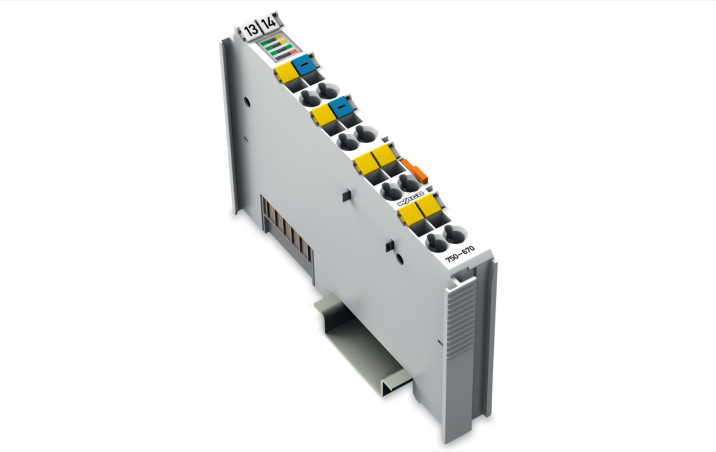

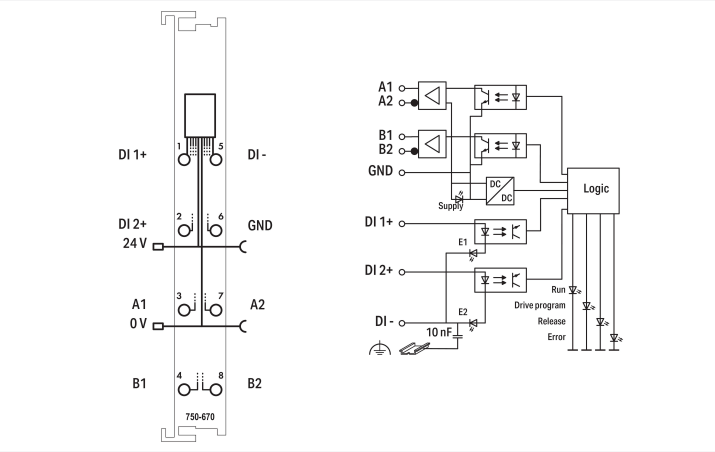

Color: light gray

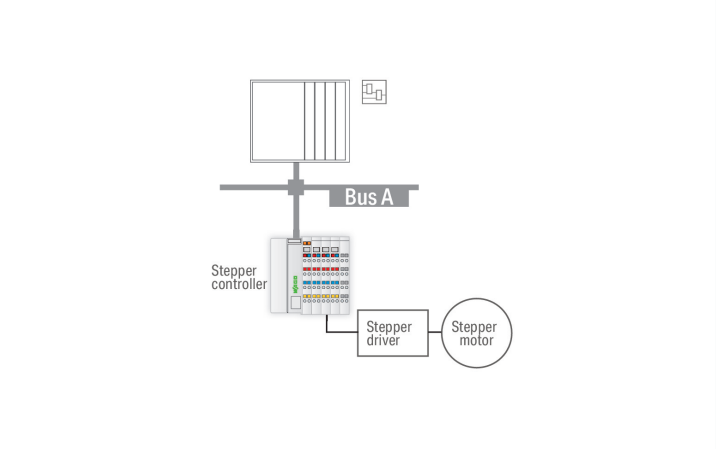

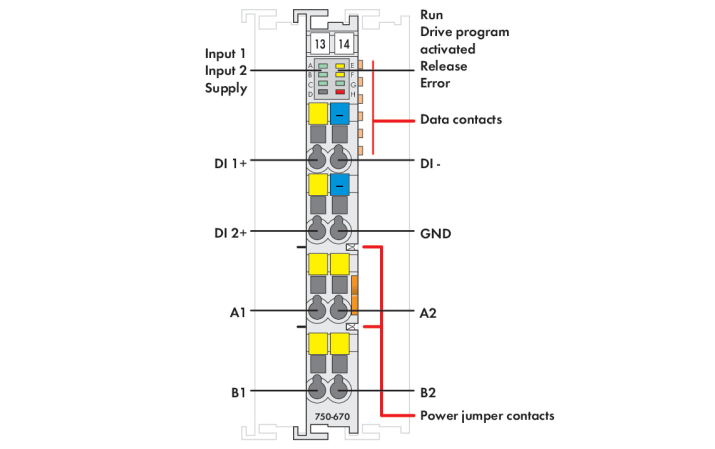

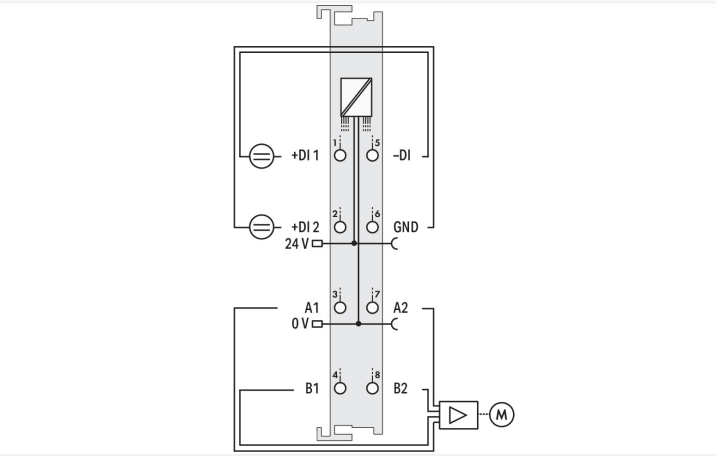

The 750-670 Module is an intelligent stepper controller used to control different drive power sections with pulse/direction interface or incremental encoder input.
Both RS-422 and 24 V or 20 mA interfaces are available.
Due to the high output frequency, stepper output stages with smooth microstepping resolution can be used.
In addition, this module can also be used as a high-precision frequency or pulse width modulator.
Two configurable inputs for start/stop, limit switches, reference cams, jog/tip, etc., are directly processed by the internal software without delay.
Versatile functions, such as positioning with different acceleration slopes, command tables, camshaft controller, auto referencing and other event-dependent properties provide this controller with a wide spectrum of possible uses.
The programmer's interface is the same for all WAGO Stepper Controllers.
Additional operating modes:

- Pulse width modulation

- Frequency generator
- Single-shot mode

Technical data

Device-specific	Operating modes: Individual positioning, reference run, jog, tip, command tables, PWM
Number of digital inputs	2
Number of outputs	1 channel (2 differential outputs A1, A2, B1, B2)
Input filter	100 µs, software filter can be connected
Input current (typ.)	2.8 mA
Output current per channel	0.03 A
Output current	short-circuit-protected
Load type	RS-422, TTL, optocoupler
Voltage range for signal (0)	–3 … +5 VDC
Voltage range for signal (1)	15 … 30 VDC
Signal voltage	5 VDC (internal), 5 … 24 VDC (external)
Signal frequency (min.)	0 Hz
Signal frequency (max.)	500000 Hz
Resolution	15 bits + 16 bit prescaler
Stepper resolution	23 bits + sign bit
Duty cycle	50 % (in stepper motor mode)
Data width	12-byte input/output
Function	Absolute/relative positioning, setpoint change on the fly, rotary axis, etc.
Supply voltage (system)	5 VDC; via data contacts
Current consumption (system supply)	98 mA
Supply voltage (field)	24 VDC (-25 … +30 %); via power jumper contacts (power supply via blade contact; transmission (field side supply voltage only) via spring contact)
Isolation	500 V system/field
Indicators	LED (A-C, G) green: Input 1, Input 2, Power Supply, Enable; LED (E, F) yellow: Run, Run Program Active; LED (H) red: Error
Number of incoming power jumper contacts	2
Number of outgoing power jumper contacts	2

Connection Data

Connection technology: I/O	8 x CAGE CLAMP®
Connectable conductor materials	Copper
Connection type	Inputs/outputs
Solid conductor	0.08 … 2.5 mm² / 28 … 14 AWG
Fine-stranded conductor	0.08 … 2.5 mm² / 28 … 14 AWG
Strip length	8 … 9 mm / 0.31 … 0.35 inches

Physical data

Width	12 mm / 0.472 inches
Height	100 mm / 3.937 inches
Depth	67.8 mm / 2.669 inches
Depth from upper-edge of DIN-rail	60.6 mm / 2.386 inches

 Continued on next page

Mechanical data

Mounting type	DIN-35 rail
Pluggable connector	fixed

Material data

Color	light gray
Housing material	Polycarbonate; polyamide 6.6
Fire load	1.045 MJ
Weight	49.9 g
Conformity marking	CE

Environmental requirements

Ambient temperature (operation)	0 … +55 °C
Ambient temperature (storage)	-40 … +85 °C
Protection type	IP20
Pollution degree	2 per IEC 61131-2
Operating altitude	0 … 2000 m / 0 … 6562 ft
Mounting position	Horizontal left, horizontal right, horizontal top, horizontal bottom, vertical top and vertical bottom
Relative humidity (without condensation)	95 %
Vibration resistance	Per IEC 60068-2-6
Shock resistance	15g per IEC 60068-2-27
EMC immunity to interference	per EN 61000-6-2
EMC emission of interference	per EN 61000-6-3
Exposure to pollutants	per IEC 60068-2-42 and IEC 60068-2-43
Permissible H_2S contaminant concentration at a relative humidity 75 %	10 ppm
Permissible SO_2 contaminant concentration at a relative humidity 75 %	25 ppm

Commercial data

Product Group	15 (I/O System)
PU (SPU)	1 pcs
Packaging type	Box
Country of origin	DE
GTIN	4045454539719
Customs tariff number	85389099990

Product Classification

UNSPSC	32151705
eCl@ss 10.0	27-24-26-05
eCl@ss 9.0	27-24-26-05
ETIM 9.0	EC001601
ETIM 10.0	EC001601
ECCN	NO US CLASSIFICATION

 Continued on next page

Environmental Product Compliance

RoHS Compliance Status	Compliant,No Exemption

Approvals / Certificates

General approvals

Approval	Standard	Certificate Name
EAC GZO Almaty Standart	TP TC 020/2011	EAC CoC 03083
KC National Radio Research Agency	Article 58-2, Clause 3	MSIP-REM-W43-MCM750
UL Underwriters Laboratories Inc. (ORDINARY LOCATIONS)	UL 508	E175199

Approvals for hazardous areas

Approval	Standard	Certificate Name
ATEX TUEV Nord Cert GmbH	EN 60079-0	TUEV14ATEX148929X (II 3 G Ex ec IIC T4 Gc)
IECEx TUEV Nord Cert GmbH	IEC 60079-0	IECEx TUN 14.0035 X (Ex ec IIC T4 Gc)
INMETRO TÜV Rheinland do Brasil Ltda.	IEC 60079-0	TÜV 12.1297 X
UKEx WAGO GmbH & Co. KG	EN 60079-0	UKCA_WAGO22UKEX003X_ec
UL Underwriters Laboratories Inc. (HAZARDOUS LOCATIONS)	UL 121201	E198726

Declarations of conformity and manufacturer's declarations

Approval	Standard	Certificate Name
EU-Declaration of Conformity WAGO GmbH & Co. KG	-	-

Downloads

Environmental Product Compliance

Compliance Search

Environmental Product Compliance 750-670

Continued on next page

Documentation

Manual

Product Manual Stepper Controller RS-422 / 24V / 20mA	V 1.0.3	pdf 2215.46 KB	
System Manual Series 750/753			

System Description

750/753 Series I/O-System – General Product Information		pdf 953.35 KB	
Overview on WAGO-I/O-SYSTEM 750 approvals		pdf 770.48 KB	

Bid Text

750-670	19.02.2019	xml 6.23 KB	
750-670	09.10.2017	doc 28.50 KB	

Instruction Leaflet

CCC Ex (Additional information)	26.04.2023	pdf 159.76 KB	

Application Notes

Application Note CoDeSys 2.3

Nutzung der Bibliothek Stepper_02 für die Module 750-670,750-671 (a114900)	1.0.3 25.02.2008	zip 3761.39 KB	

Application Note e!COCKPIT

e!COCKPIT Application Note WagoAppStepper	1.0.1 06.12.2021	pdf 3306.34 KB	

Application note SIEMENS

	1.1.0 03.02.2017	zip 8659.49 KB	
Using stepper modules with TIA Portal (a114904)	1.2.5 05.01.2021	zip 9967.41 KB	

CAD/CAE-Data

CAD data

2D/3D Models 750-670

CAE data

EPLAN Data Portal 750-670

WSCAD Universe 750-670

ZUKEN Portal 750-670

Device Files

Device Driver

WAGO USB Service Kabel Treiber / Serie 750 und 857	6.5.3.0 10.09.2014	zip 4721.96 KB	

Continued on next page

Libraries

Library			
Stepper_03.lib	1.0.5 18.01.2021	zip 588.94 KB	
Function blocks for the stepper modules 750-670 and 750-671	1.0.5 03.01.2007	zip 865.32 KB	

1 Compatible Products

1.1 Optional Accessories

1.1.1 DIN-rail

1.1.1.1 Mounting accessories

Item No.: 210-196
Aluminum carrier rail; 35 x 8.2 mm; 1.6 mm thick; 2 m long; unslotted; similar to EN 60715; silver-colored

Item No.: 210-198
Copper carrier rail; 35 x 15 mm; 2.3 mm thick; 2 m long; unslotted; according to EN 60715; copper-colored

Item No.: 210-197
Steel carrier rail; 35 x 15 mm; 1.5 mm thick; 2 m long; slotted; similar to EN 60715; silver-colored

Item No.: 210-114
Steel carrier rail; 35 x 15 mm; 1.5 mm thick; 2 m long; unslotted; similar to EN 60715; silver-colored

Item No.: 210-118
Steel carrier rail; 35 x 15 mm; 2.3 mm thick; 2 m long; unslotted; according to EN 60715; silver-colored

Item No.: 210-115
Steel carrier rail; 35 x 7.5 mm; 1 mm thick; 2 m long; slotted; according to EN 60715; "Hole width 18 mm; silver-colored

Item No.: 210-112
Steel carrier rail; 35 x 7.5 mm; 1 mm thick; 2 m long; slotted; according to EN 60715; "Hole width 25 mm; silver-colored

Item No.: 210-113
Steel carrier rail; 35 x 7.5 mm; 1 mm thick; 2 m long; unslotted; according to EN 60715; silver-colored

1.1.2 Marking

1.1.2.1 Group marker carrier

Item No.: 750-107
Group marker carrier

1.1.2.2 Marker

Item No.: 2009-145/000-006
Mini-WSB Inline; for Smart Printer; 1700 pieces on roll; stretchable 5 - 5.2 mm; plain; snap-on type; blue

Item No.: 2009-145/000-007
Mini-WSB Inline; for Smart Printer; 1700 pieces on roll; stretchable 5 - 5.2 mm; plain; snap-on type; gray

Item No.: 2009-145/000-023
Mini-WSB Inline; for Smart Printer; 1700 pieces on roll; stretchable 5 - 5.2 mm; plain; snap-on type; green

Item No.: 2009-145/000-012
Mini-WSB Inline; for Smart Printer; 1700 pieces on roll; stretchable 5 - 5.2 mm; plain; snap-on type; orange

Item No.: 2009-145/000-005
Mini-WSB Inline; for Smart Printer; 1700 pieces on roll; stretchable 5 - 5.2 mm; plain; snap-on type; red

Item No.: 2009-145/000-024
Mini-WSB Inline; for Smart Printer; 1700 pieces on roll; stretchable 5 - 5.2 mm; plain; snap-on type; violet

Item No.: 2009-145
Mini-WSB Inline; for Smart Printer; 1700 pieces on roll; stretchable 5 - 5.2 mm; plain; snap-on type; white

Item No.: 2009-145/000-002
Mini-WSB Inline; for Smart Printer; 1700 pieces on roll; stretchable 5 - 5.2 mm; plain; snap-on type; yellow

Item No.: 248-501/000-006
Mini-WSB marking card; as card; not stretchable; plain; snap-on type; blue

Item No.: 248-501/000-007
Mini-WSB marking card; as card; not stretchable; plain; snap-on type; gray

Item No.: 248-501/000-023
Mini-WSB marking card; as card; not stretchable; plain; snap-on type; green

Item No.: 248-501/000-017
Mini-WSB marking card; as card; not stretchable; plain; snap-on type; light green

Item No.: 248-501/000-012
Mini-WSB marking card; as card; not stretchable; plain; snap-on type; orange

Item No.: 248-501/000-005
Mini-WSB marking card; as card; not stretchable; plain; snap-on type; red

Item No.: 248-501/000-024
Mini-WSB marking card; as card; not stretchable; plain; snap-on type; violet

Item No.: 248-501
Mini-WSB marking card; as card; not stretchable; plain; snap-on type; white

 Continued on next page

1.1.2.2 Marker

Item No.: 248-501/000-002
Mini-WSB marking card; as card; not stretchable; plain; snap-on type; yellow

1.1.2.3 Marker carrier

Item No.: 750-103
Group marker carrier

1.1.3 Shield termination

1.1.3.1 Shield clamping saddles

Item No.: 790-108
Shield clamping saddle; 11 mm wide; diameter of compatible conductor; 3 ... 8 mm

Item No.: 790-208
Shield clamping saddle; 12.4 mm wide; 3 ... 8 mm

Item No.: 790-116
Shield clamping saddle; 19 mm wide; diameter of compatible conductor; 7 ... 16 mm

Item No.: 790-216
Shield clamping saddle; 21.8 mm wide; 6 ... 16 mm

Item No.: 790-124
Shield clamping saddle; 27 mm wide; diameter of compatible conductor; 6 ... 24 mm

Item No.: 790-220
Shield clamping saddle; 30 mm wide; 6 ... 20 mm

Item No.: 790-140
Shield clamping saddle; diameter of compatible conductor

1.1.4 Supply module

1.1.4.1 Supply module

Item No.: 750-612
Power Supply; 0 ... 230 V AC/DC

Item No.: 750-602
Power Supply; 24 VDC

Item No.: 750-601
Power Supply; 24 VDC; fuse holder

Item No.: 750-610
Power Supply; 24 VDC; fuse holder; Diagnostics

1.1.5 System enclosure

1.1.5.1 System enclosure

Item No.: 850-825
IP65 enclosure; Aluminium (RAL 7032); WxHxD (160x100x160 mm); 9 x M12, 4 x M20

Item No.: 850-826
IP65 enclosure; Aluminium (RAL 7032); WxHxD (240x100x160 mm); 4 x M20, 4 x M16, 14 x M12 cable grip

Item No.: 850-827
IP65 enclosure; Aluminium (RAL 7032); WxHxD (320x100x160 mm); 4 x M20, 8 x M16, 17 x M12 cable grip

Item No.: 850-828
IP65 enclosure; Aluminium (RAL 7032); WxHxD (480x100x160 mm); 4 x M20, 10 x M16, 35 x M12 cable grip

Item No.: 850-826/002-000
IP65 enclosure; Aluminium (RAL 7035); WxHxD (240x100x160 mm); 4 x M20, 4 x M16, 14 x M12 cable grip

Item No.: 850-827/002-000
IP65 enclosure; Aluminium (RAL 7035); WxHxD (320x100x160 mm); 4 x M20, 8 x M16, 17 x M12 cable grip

Item No.: 850-828/002-000
IP65 enclosure; Aluminium (RAL 7035); WxHxD (480x100x160 mm); 4 x M20, 10 x M16, 35 x M12 cable grip

Item No.: 850-834
IP65 enclosure; Polyester (RAL 7032); WxHxD (164x100x164 mm); 9 x M12, 4 x M20

Item No.: 850-835
IP65 enclosure; Polyester (RAL 7032); WxHxD (244x100x164 mm); 4 x M20, 4 x M16, 14 x M12 cable grip

Item No.: 850-836
IP65 enclosure; Polyester (RAL 7032); WxHxD (324x100x164 mm); 4 x M20, 8 x M16, 17 x M12 cable grip

Item No.: 850-814/002-000
IP65 enclosure; Sheet steel (RAL 7035); WxHxD (200x120x200 mm); without flange plate

Item No.: 850-815/002-000
IP65 enclosure; Sheet steel (RAL 7035); WxHxD (300x120x200 mm); without flange plate

 Continued on next page

1.1.5.1 System enclosure

Item No.: 850-816/002-000
IP65 enclosure; Sheet steel (RAL 7035); WxHxD (400x120x200 mm); without flange plate

Item No.: 850-817/002-000
IP65 enclosure; Sheet steel (RAL 7035); WxHxD (600x120x200 mm); without flange plate