Data Sheet | Item Number: 750-478

2-channel analog input; 0 ... 10 VDC; Single-ended; 16 bits

https://www.wago.com/750-478

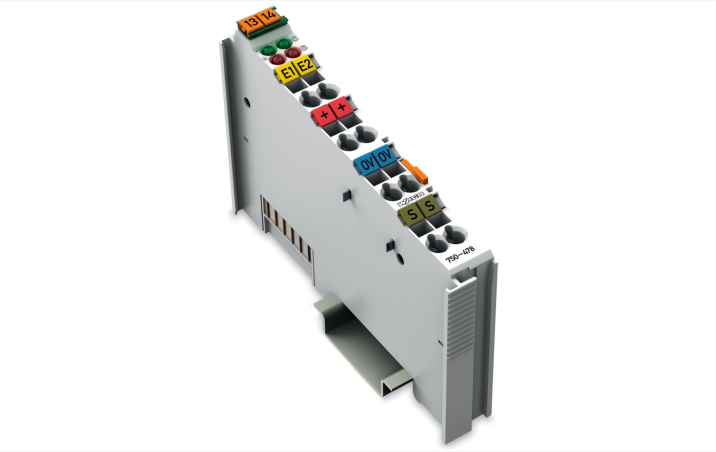

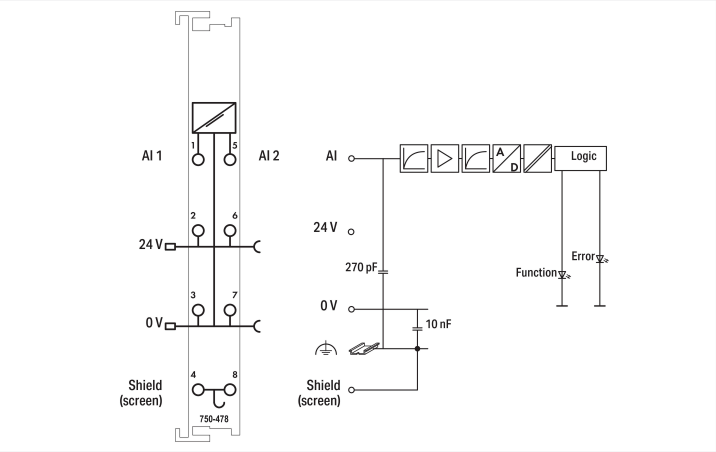

Color: light gray

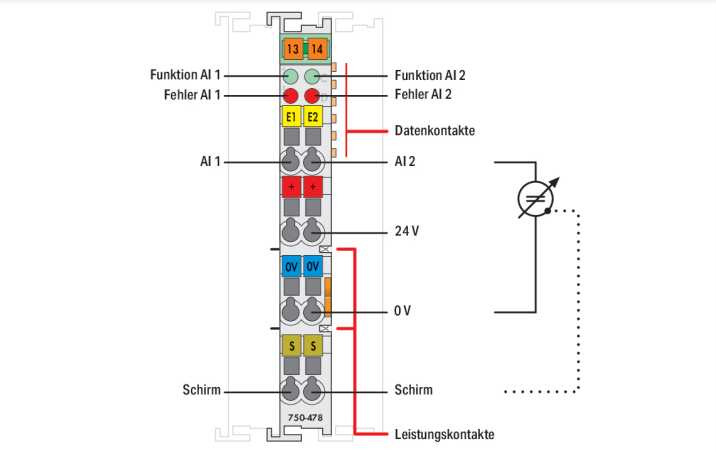

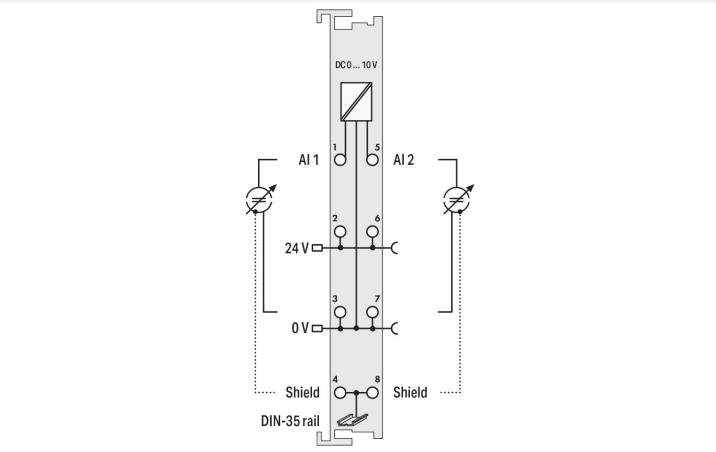

This analog input module processes standard 0–10 V signals.
The input signal is electrically isolated and is transmitted with a resolution of 16 bits.
The internal system supply powers the module.
The input channels of the module have a common ground potential.
The 24 V supply is derived from the power jumper contacts.
The shield directly connects to the DIN-rail.

Technical data	
Number of analog inputs	2
Total number of channels (module)	2
Signal type	Voltage
Signal type (voltage)	0 ... 10 VDC
Sensor connection	2 x (2-wire)
Input filter frequency (analog)	50 Hz
Input voltage (max.)	24 V
Signal characteristics	Single-ended
Resolution [bit]	16 bits
Data width	2 x 16-bit data; 2 x 8-bit control/status (optional)
Noise rejection at sampling frequency	-100 dB
Noise rejection above sampling frequency	-40 dB
Internal resistance	130 kΩ
Conversion time (typ.)	80 ms
Measurement error (reference temperature)	25 °C
Measurement error, deviation (max.) from the upper-range value	0.1 %

Continued on next page

Technical data

Temperature error (max.) of the upper-range value	0.01 %/K
Supply voltage (system)	5 VDC; via data contacts
Current consumption (system supply)	75 mA
Supply voltage (field)	24 VDC (-25 ... +30 %); via power jumper contacts (power supply via blade contact; transmission (field side supply voltage only) via spring contact)
Isolation	500 V system/field
Indicators	LED (A, C) green: Function AI 1, AI 2; LED (B, D) red: Error AI 1, AI 2
Number of incoming power jumper contacts	2
Number of outgoing power jumper contacts	2

Connection Data

Connection technology: I/O	8 x CAGE CLAMP®
Connectable conductor materials	Copper
Connection type	Inputs/outputs
Solid conductor	0.08 ... 2.5 mm² / 28 ... 14 AWG
Fine-stranded conductor	0.08 ... 2.5 mm² / 28 ... 14 AWG
Strip length	8 ... 9 mm / 0.31 ... 0.35 inches

Physical data

Width	12 mm / 0.472 inches
Height	100 mm / 3.937 inches
Depth	69.8 mm / 2.748 inches
Depth from upper-edge of DIN-rail	62.6 mm / 2.465 inches

Mechanical data

Mounting type	DIN-35 rail
Pluggable connector	fixed

Material data

Color	light gray
Housing material	Polycarbonate; polyamide 6.6
Fire load	0.934 MJ
Weight	52.5 g
Conformity marking	CE

Environmental requirements

Ambient temperature (operation)	0 ... +55 °C
Ambient temperature (storage)	-40 ... +85 °C
Protection type	IP20
Pollution degree	2 per IEC 61131-2
Operating altitude	0 ... 2000 m / 0 ... 6562 ft
Mounting position	Horizontal left, horizontal right, horizontal top, horizontal bottom, vertical top and vertical bottom
Relative humidity (without condensation)	95 %
Vibration resistance	4g per IEC 60068-2-6
Shock resistance	15g per IEC 60068-2-27
EMC immunity to interference	per EN 61000-6-2, marine applications
EMC emission of interference	per EN 61000-6-4, marine applications
Exposure to pollutants	per IEC 60068-2-42 and IEC 60068-2-43
Permissible H_2S contaminant concentration at a relative humidity 75 %	10 ppm
Permissible SO_2 contaminant concentration at a relative humidity 75 %	25 ppm

 Continued on next page

Commercial data

Product Group	15 (I/O System)
PU (SPU)	1 pcs
Packaging type	Box
Country of origin	DE
GTIN	4045454393380
Customs tariff number	85437090990

Product Classification

UNSPSC	32101602
eCl@ss 10.0	27-24-26-01
eCl@ss 9.0	27-24-26-01
ETIM 9.0	EC001596
ETIM 10.0	EC001596
ECCN	NO US CLASSIFICATION

Environmental Product Compliance

CAS-No.	1303-86-2 1317-36-8 7439-92-1 80-43-3
REACH Candidate List Substance	Diboron trioxide Lead Lead monoxide Peroxide, bis(1-methyl-1-phenylethyl)
RoHS Compliance Status	Compliant,With Exemption
RoHS Exemption	7(a) 7(c)-I
SCIP notification number (Austria)	282e55f2-f482-4de6-a6ae-b9c7405dd2ec
SCIP notification number (Belgium)	e864dbfe-f5e2-4983-a4a0-2d96e8e63c02
SCIP notification number (Bulgaria)	0911182d-e64d-4a85-8c49-b393bf553dd9
SCIP notification number (Czech Republic)	df384af8-e1da-4676-a29e-b527f160e7b8
SCIP notification number (Denmark)	652b96ca-0c53-4d3f-ad37-99d246cdb633
SCIP notification number (Finland)	89b85810-7c66-4b48-8668-22e444ece548
SCIP notification number (France)	4af97a02-92b4-46a3-b1c3-ef92604b5bba
SCIP notification number (Germany)	4e9f089e-24cc-4947-abfb-cf4d5a43f855
SCIP notification number (Hungary)	9a52e106-aeba-4584-9671-d65d0c3ff667
SCIP notification number (Italy)	577ed35b-dcda-43e0-a2e9-d7c5f35f6d12
SCIP notification number (Netherlands)	d58c7284-2de5-461a-8857-69f1068aed9b
SCIP notification number (Poland)	b0caf523-141a-4d25-95fd-3162eed03618
SCIP notification number (Romania)	7e9c8d24-1438-4d3f-9184-cfb9614287c0
SCIP notification number (Sweden)	59a89f11-c039-4d7d-a0d6-d86d46ca3c93

Approvals / Certificates

General approvals

Approval	Standard	Certificate Name
EAC GZO Almaty Standart	TP TC 020/2011	EAC CoC 03083
KC National Radio Research Agency	Article 58-2, Clause 3	MSIP-REM-W43-AIM750

General approvals

UL Underwriters Laboratories Inc. (ORDINARY LOCATIONS)	UL 508	E175199

 Continued on next page

Declarations of conformity and manufacturer's declarations

Approval	Standard	Certificate Name
EU-Declaration of Conformity WAGO GmbH & Co. KG	-	-
UK-Declaration of Conformity WAGO GmbH & Co. KG	-	-

Approvals for marine applications

Approval	Standard	Certificate Name
ABS American Bureau of Shipping	-	25-0415412
BSH Bundesamt fuer Seeschiffahrt und Hydrographie	-	1104
BV Bureau Veritas S.A.	-	13453/E0 BV
DNV DNV GL SE	DNV-CG-0339,Aug.2021	TAA0000194
KR Korean Register of Shipping	-	KR HMB05880-AC001
LR Lloyds Register EMEA	-	LR22180952TA
PRS Polski Rejestr Statków	-	TE/1101/880590/23
RINA RINA Germany GmbH	-	ELE343521XG001

Approvals for hazardous areas

Approval	Standard	Certificate Name
ATEX TUEV Nord Cert GmbH	EN 60079-0	TUEV14ATEX148929X (II 3 G Ex ec IIC T4 Gc)
CCCEx CQST/CNEx	CNCA-C23-01	2020312310000213 (Ex ec IIC T4 Gc)
IECEx TUEV Nord Cert GmbH	IEC 60079-0	IECEx TUN 14.0035 X (Ex ec IIC T4 Gc)
INMETRO TÜV Rheinland do Brasil Ltda.	IEC 60079-0	TÜV 12.1297 X
UKEx WAGO GmbH & Co. KG	EN 60079-0	UKCA_WAGO22UKEX003X_ec
UL Underwriters Laboratories Inc. (HAZARDOUS LOCATIONS)	UL 121201	E198726

Continued on next page

Downloads

Environmental Product Compliance

Compliance Search

Environmental Product Compliance 750-478	

Documentation

Manual

Product Manual 2-channel, 0-10VDC, single-ended	V 1.1.0	pdf 2037.57 KB	
System Manual Series 750/753			

System Description

750/753 Series I/O-System – General Product Information	pdf 953.35 KB	
Overview on WAGO-I/O-SYSTEM 750 approvals	pdf 770.48 KB	

Bid Text

750-478	19.10.2017	doc 28.00 KB	
750-478	19.02.2019	xml 4.46 KB	

Instruction Leaflet

CCC Ex (Additional information)	26.04.2023	pdf 159.76 KB	

CAD/CAE-Data

CAD data

2D/3D Models 750-478

CAE data

EPLAN Data Portal 750-478
WSCAD Universe 750-478
ZUKEN Portal 750-478

Device Files

Device Driver

WAGO USB Service Kabel Treiber / Serie 750 und 857	6.5.3.0 10.09.2014	zip 4721.96 KB	

 Continued on next page

1 Compatible Products

1.1 Optional Accessories

1.1.1 DIN-rail

1.1.1.1 Mounting accessories

Item No.: 210-196
Aluminum carrier rail; 35 x 8.2 mm; 1.6 mm thick; 2 m long; unslotted; similar to EN 60715; silver-colored

Item No.: 210-198
Copper carrier rail; 35 x 15 mm; 2.3 mm thick; 2 m long; unslotted; according to EN 60715; copper-colored

Item No.: 210-197
Steel carrier rail; 35 x 15 mm; 1.5 mm thick; 2 m long; slotted; similar to EN 60715; silver-colored

Item No.: 210-114
Steel carrier rail; 35 x 15 mm; 1.5 mm thick; 2 m long; unslotted; similar to EN 60715; silver-colored

Item No.: 210-118
Steel carrier rail; 35 x 15 mm; 2.3 mm thick; 2 m long; unslotted; according to EN 60715; silver-colored

Item No.: 210-112
Steel carrier rail; 35 x 7.5 mm; 1 mm thick; 2 m long; slotted; according to EN 60715; "Hole width 25 mm; silver-colored

Item No.: 210-113
Steel carrier rail; 35 x 7.5 mm; 1 mm thick; 2 m long; unslotted; according to EN 60715; silver-colored

1.1.2 Marking

1.1.2.1 Group marker carrier

Item No.: 750-106
Group marker carrier

1.1.2.2 Marker

Item No.: 750-100
Marker card; as a DIN A4 sheet; plain

Item No.: 2009-145/000-006
Mini-WSB Inline; for Smart Printer; 1700 pieces on roll; stretchable 5 - 5.2 mm; plain; snap-on type; blue

Item No.: 2009-145/000-007
Mini-WSB Inline; for Smart Printer; 1700 pieces on roll; stretchable 5 - 5.2 mm; plain; snap-on type; gray

Item No.: 2009-145/000-023
Mini-WSB Inline; for Smart Printer; 1700 pieces on roll; stretchable 5 - 5.2 mm; plain; snap-on type; green

Item No.: 2009-145/000-012
Mini-WSB Inline; for Smart Printer; 1700 pieces on roll; stretchable 5 - 5.2 mm; plain; snap-on type; orange

Item No.: 2009-145/000-005
Mini-WSB Inline; for Smart Printer; 1700 pieces on roll; stretchable 5 - 5.2 mm; plain; snap-on type; red

Item No.: 2009-145/000-024
Mini-WSB Inline; for Smart Printer; 1700 pieces on roll; stretchable 5 - 5.2 mm; plain; snap-on type; violet

Item No.: 2009-145
Mini-WSB Inline; for Smart Printer; 1700 pieces on roll; stretchable 5 - 5.2 mm; plain; snap-on type; white

Item No.: 2009-145/000-002
Mini-WSB Inline; for Smart Printer; 1700 pieces on roll; stretchable 5 - 5.2 mm; plain; snap-on type; yellow

Item No.: 248-501/000-006
Mini-WSB marking card; as card; not stretchable; plain; snap-on type; blue

Item No.: 248-501/000-007
Mini-WSB marking card; as card; not stretchable; plain; snap-on type; gray

Item No.: 248-501/000-023
Mini-WSB marking card; as card; not stretchable; plain; snap-on type; green

Item No.: 248-501/000-017
Mini-WSB marking card; as card; not stretchable; plain; snap-on type; light green

Item No.: 248-501/000-012
Mini-WSB marking card; as card; not stretchable; plain; snap-on type; orange

Item No.: 248-501/000-005
Mini-WSB marking card; as card; not stretchable; plain; snap-on type; red

Item No.: 248-501/000-024
Mini-WSB marking card; as card; not stretchable; plain; snap-on type; violet

Item No.: 248-501
Mini-WSB marking card; as card; not stretchable; plain; snap-on type; white

Item No.: 248-501/000-002
Mini-WSB marking card; as card; not stretchable; plain; snap-on type; yellow

Continued on next page

1.1.2.3 Marker carrier

Item No.: 750-103
Group marker carrier

1.1.3 Shield termination

1.1.3.1 Shield clamping saddles

Item No.: 790-108
Shield clamping saddle; 11 mm wide; diameter of compatible conductor; 3 ... 8 mm

Item No.: 790-208
Shield clamping saddle; 12.4 mm wide; 3 ... 8 mm

Item No.: 790-116
Shield clamping saddle; 19 mm wide; diameter of compatible conductor; 7 ... 16 mm

Item No.: 790-216
Shield clamping saddle; 21.8 mm wide; 6 ... 16 mm

Item No.: 790-124
Shield clamping saddle; 27 mm wide; diameter of compatible conductor; 6 ... 24 mm

Item No.: 790-220
Shield clamping saddle; 30 mm wide; 6 ... 20 mm

Item No.: 790-140
Shield clamping saddle; diameter of compatible conductor

1.1.4 Supply module

1.1.4.1 Supply module

Item No.: 750-612
Power Supply; 0 ... 230 V AC/DC

Item No.: 750-602
Power Supply; 24 VDC

Item No.: 750-601
Power Supply; 24 VDC; fuse holder

Item No.: 750-610
Power Supply; 24 VDC; fuse holder; Diagnostics

1.1.5 System enclosure

1.1.5.1 System enclosure

Item No.: 850-825
IP65 enclosure; Aluminium (RAL 7032); WxHxD (160x100x160 mm); 9 x M12, 4 x M20

Item No.: 850-826
IP65 enclosure; Aluminium (RAL 7032); WxHxD (240x100x160 mm); 4 x M20, 4 x M16, 14 x M12 cable grip

Item No.: 850-827
IP65 enclosure; Aluminium (RAL 7032); WxHxD (320x100x160 mm); 4 x M20, 8 x M16, 17 x M12 cable grip

Item No.: 850-828
IP65 enclosure; Aluminium (RAL 7032); WxHxD (480x100x160 mm); 4 x M20, 10 x M16, 35 x M12 cable grip

Item No.: 850-826/002-000
IP65 enclosure; Aluminium (RAL 7035); WxHxD (240x100x160 mm); 4 x M20, 4 x M16, 14 x M12 cable grip

Item No.: 850-827/002-000
IP65 enclosure; Aluminium (RAL 7035); WxHxD (320x100x160 mm); 4 x M20, 8 x M16, 17 x M12 cable grip

Item No.: 850-828/002-000
IP65 enclosure; Aluminium (RAL 7035); WxHxD (480x100x160 mm); 4 x M20, 10 x M16, 35 x M12 cable grip

Item No.: 850-834
IP65 enclosure; Polyester (RAL 7032); WxHxD (164x100x164 mm); 9 x M12, 4 x M20

Item No.: 850-835
IP65 enclosure; Polyester (RAL 7032); WxHxD (244x100x164 mm); 4 x M20, 4 x M16, 14 x M12 cable grip

Item No.: 850-836
IP65 enclosure; Polyester (RAL 7032); WxHxD (324x100x164 mm); 4 x M20, 8 x M16, 17 x M12 cable grip

Item No.: 850-814/002-000
IP65 enclosure; Sheet steel (RAL 7035); WxHxD (200x120x200 mm); without flange plate

Item No.: 850-815/002-000
IP65 enclosure; Sheet steel (RAL 7035); WxHxD (300x120x200 mm); without flange plate

Item No.: 850-816/002-000
IP65 enclosure; Sheet steel (RAL 7035); WxHxD (400x120x200 mm); without flange plate

Item No.: 850-817/002-000
IP65 enclosure; Sheet steel (RAL 7035); WxHxD (600x120x200 mm); without flange plate