# Data Sheet | Item Number: 750-337

Fieldbus Coupler CANopen; MCS

https://www.wago.com/750-337

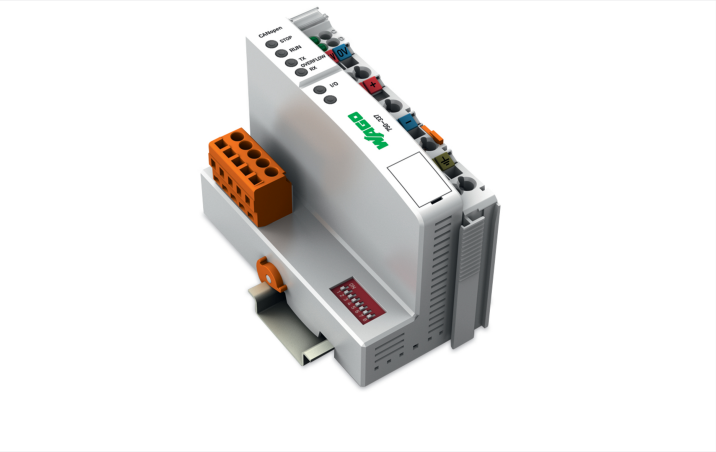

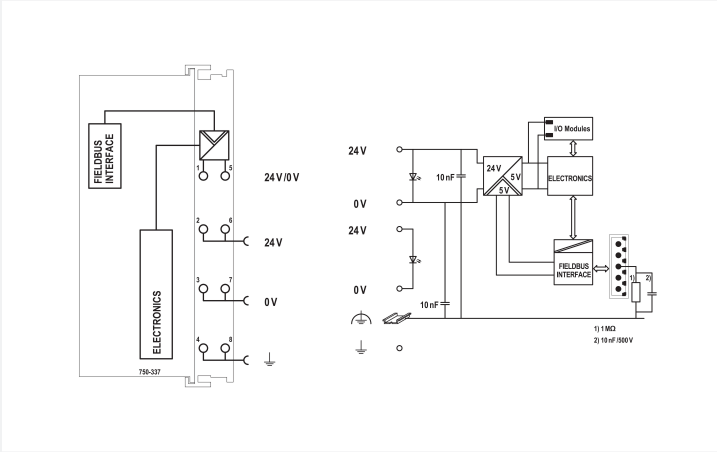


Color: ■ light gray

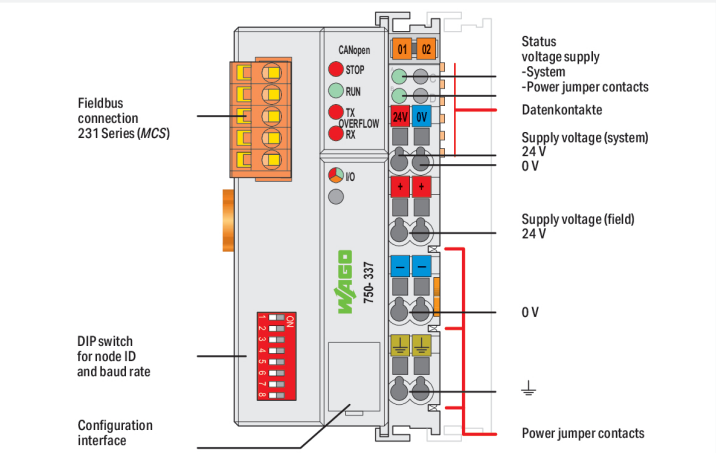


This fieldbus coupler connects the WAGO I/O System as a slave to the CANopen fieldbus. Data is transmitted via PDOs and SDOs.

The fieldbus coupler detects all connected I/O modules and creates a local process image. Analog and specialty module data is sent via words and/or bytes, digital data is sent bit by bit.

The local process image is divided into two data zones containing the data received and the data to be sent. The process data can be sent via the CANopen bus to a control system for further processing. The process output data is sent via the CANopen bus.

The data of the analog modules is stored in the PDOs according to the order in which the modules are connected to the coupler. The bits from the digital modules are sent byte by byte and also mapped in the PDOs. If the amount of digital I/O information exceeds eight bits, the coupler automatically starts with a new byte.

All entries of the object directory can be mapped as required in the 32 Rx PDOs and 32 Tx PDOs.

The complete input and output process image can be transmitted using SDOs.

Spacer modules can be set via software.

## Notes

| | |
|---|---|
| Note | **Note: Configuration files required (EDS)!** |

## Technical data

| | |
|---|---|
| Communications | CANopen |
| Number of fieldbus nodes on master (max.) | 110 |
| Transmission rate | 10 kBd ... 1 MBd |
| Bus segment length (max.) | 1000 m |
| Transmission medium (communication/fieldbus) | Shielded Cu cable 3 x 0.25 mm² |
| Number of modules per node (max.) | 64 |
| Number of modules without a bus extension (max.) | 64 |
| Other CANopen features | NMT slave<br>Minimum boot-up<br>Variable PDO mapping<br>Emergency message<br>Life guarding<br>Virtual module configuration |
| Number of PDOs | 32 Tx / 32 Rx |
| Number of SDOs | 2 SDO servers |
| COB ID distribution | SDO, standard |
| Node ID distribution | DIP switch |
| Communication profile | DS-301 V4.1 |
| Device profile | DS-401 V2.0<br>Limit value monitoring<br>Edge-triggered PDOs<br>Configurable response in the event of an error |
| Input and output process image (fieldbus) max. | 512 bytes/512 bytes |
| Supply voltage (system) | 24 VDC, SELV/PELV (-25 ... +30 %); via wiring interface (CAGE CLAMP® connection); External fuse required: 2 A slow-blow |
| Current consumption (system supply) | 350 mA |
| Total current (system supply) | 1650 mA |
| Supply voltage (field) | 24 VDC, SELV/PELV (-25 ... +30 %); via power jumper contacts (supply via CAGE CLAMP® connection; distribution via spring contact); External fuse required: 10 A slow-blow |
| Input current (typ.) at nominal load (24 V) | 500 mA |
| Power supply efficiency (typ.) at nominal load (24 V) | 87 % |
| Number of outgoing power jumper contacts | 3 |
| Current carrying capacity (power jumper contacts) | 10 A |

## Safety and protection

| | |
|---|---|
| Protection type | IP20 |
| Pollution degree | 2 per IEC 61131-2 |
| Isolation | 500 V system/field |

## Connection Data

| | |
|---|---|
| Connection technology: communication/fieldbus | CANopen: 1 x Male connector; 5-pole |
| Connection technology: field supply | 6 x CAGE CLAMP® |
| Connection technology: system supply | 2 x CAGE CLAMP® |
| Connectable conductor materials | Copper |
| Connection type | System/field supply |
| Solid conductor | 0.08 ... 2.5 mm² / 28 ... 14 AWG |
| Fine-stranded conductor | 0.08 ... 2.5 mm² / 28 ... 14 AWG |
| Strip length | 8 ... 9 mm / 0.31 ... 0.35 inches |
| Connection technology: device configuration | 1 x Male connector; 4-pole |

 Continued on next page

## Physical data

| | |
|---|---|
| Width | 50.5 mm / 1.988 inches |
| Height | 100 mm / 3.937 inches |
| Depth | 71.1 mm / 2.799 inches |
| Depth from upper-edge of DIN-rail | 63.9 mm / 2.516 inches |

## Mechanical data

| | |
|---|---|
| Mounting type | DIN-35 rail |

## Material data

| | |
|---|---|
| Color | light gray |
| Housing material | Polycarbonate; polyamide 6.6 |
| Fire load | 3.262 MJ |
| Weight | 184 g |
| Conformity marking | CE |

## Environmental requirements

| | |
|---|---|
| Ambient temperature (operation) | 0 … +55 °C |
| Ambient temperature (storage) | -25 … +85 °C |
| Operating altitude | 0 … 2000 m / 0 … 6562 ft |
| Mounting position | Horizontal left, horizontal right, horizontal top, horizontal bottom, vertical top and vertical bottom |
| Relative humidity (without condensation) | 95 % |
| Vibration resistance | 4g per IEC 60068-2-6 |
| Shock resistance | 15g per IEC 60068-2-27 |
| EMC immunity to interference | per EN 61000-6-2, marine applications |
| EMC emission of interference | per EN 61000-6-4, marine applications |
| Exposure to pollutants | per IEC 60068-2-42 and IEC 60068-2-43 |
| Permissible $H_2S$ contaminant concentration at a relative humidity 75 % | 10 ppm |
| Permissible $SO_2$ contaminant concentration at a relative humidity 75 % | 25 ppm |

## Data Act

| | |
|---|---|
| Pre-contractual Information | <a href="https://www.wago.com/global/d/Data-Act-750-Series-Coupler">Data-Act-750-Series-Coupler</a> |

## Commercial data

| | |
|---|---|
| Product Group | 15 (I/O System) |
| PU (SPU) | 1 pcs |
| Packaging type | Box |
| Country of origin | DE |
| GTIN | 4045454526900 |
| Customs tariff number | 85176200000 |

 Continued on next page

## Product Classification

| | |
|---|---|
| UNSPSC | 32151705 |
| eCl@ss 10.0 | 27-24-26-07 |
| eCl@ss 9.0 | 27-24-26-07 |
| ETIM 9.0 | EC001603 |
| ETIM 10.0 | EC001603 |
| ECCN | NO US CLASSIFICATION |

## Environmental Product Compliance

| | |
|---|---|
| CAS-No. | 12060-00-3<br>1303-86-2<br>1317-36-8<br>25550-51-0<br>7439-92-1<br>79-94-7 |
| REACH Candidate List Substance | 2,2',6,6'-tetrabromo-4,4'-isopropylidenediphenol<br>4-Methyl-1,2-cyclohexanedicarboxylic anhydride<br>Diboron trioxide<br>Lead<br>Lead monoxide<br>Lead titanium oxide (PbTiO3) |
| RoHS Compliance Status | Compliant,With Exemption |
| RoHS Exemption | 6(c)<br>7(a)<br>7(c)-I<br>7(c)-II<br>7c |
| SCIP notification number (Bulgaria) | f01fb8e5-1938-4140-a5f1-6a76d6cf3311 |
| SCIP notification number (Czech Republic) | 4ba18801-d760-496e-801f-12742930c4ff |

## Approvals / Certificates

### General approvals

| Approval | Standard | Certificate Name |
|---|---|---|
| EAC<br>GZO Almaty Standart | TP TC 020/2011 | EAC CoC 03083 |
| KC<br>National Radio Research Agency | Article 58-2, Clause 3 | MSIP-REM-W43-FBC750 |
| UL<br>Underwriters Laboratories Inc. (ORDINARY LOCATIONS) | UL 508 | E175199 |

### Declarations of conformity and manufacturer's declarations

| Approval | Standard | Certificate Name |
|---|---|---|
| EU-Declaration of Conformity<br>WAGO GmbH & Co. KG | - | - |
| UK-Declaration of Conformity<br>WAGO GmbH & Co. KG | - | - |

### Approvals for marine applications

| Approval | Standard | Certificate Name |
|---|---|---|
| ABS<br>American Bureau of Shipping | - | 25-0415412 |
| BSH<br>Bundesamt fuer Seeschiffahrt und Hydrographie | - | 1104 |

### Approvals for marine applications

| | | |
|---|---|---|
| BV<br>Bureau Veritas S.A. | - | 13453/E0 BV |
| DNV<br>DNV GL SE | DNV-CG-0339,Aug.2021 | TAA0000194 |
| KR<br>Korean Register of Shipping | - | KR HMB05880-AC001 |
| LR<br>Lloyds Register EMEA | - | LR22180952TA |
| PRS<br>Polski Rejestr Statków | - | TE/1101/880590/23 |
| RINA<br>RINA Germany GmbH | - | ELE343521XG001 |

 Continued on next page

## Approvals for hazardous areas

| Approval | Standard | Certificate Name |
|---|---|---|
| ATEX<br>TUEV Nord Cert GmbH | EN 60079-0 | TUEV14ATEX148929X (II 3 G Ex ec IIC T4 Gc) |
| IECEx<br>TUEV Nord Cert GmbH | IEC 60079-0 | IECEx TUN 14.0035 X (Ex ec IIC T4 Gc) |
| INMETRO<br>TÜV Rheinland do Brasil Ltda. | IEC 60079-0 | TÜV 12.1297 X |
| UKEx<br>WAGO GmbH & Co. KG | EN 60079-0 | UKCA_WA GO22UKEX003X_ec |
| UL<br>Underwriters Laboratories Inc. (HAZARDOUS LOCATIONS) | UL 121201 | E198726 |

## Downloads

### Environmental Product Compliance

#### Compliance Search

Environmental Product Compliance 750-337

### Documentation

#### Manual

| | | | |
|---|---|---|---|
| Product Manual CANopen Fieldbus Coupler, MCS | V 4.1.0 | pdf<br>8389.63 KB | |
| System Manual Series 750/753 | | | |

#### System Description

| | | |
|---|---|---|
| 750/753 Series I/O-System – General Product Information | pdf<br>953.35 KB | |
| Overview on WAGO-I/O-SYSTEM 750 approvals | pdf<br>770.48 KB | |

#### Bid Text

| | | | |
|---|---|---|---|
| 750-337 | 19.02.2019 | xml<br>7.19 KB | |
| 750-337 | 21.07.2017 | doc<br>31.00 KB | |

#### Instruction Leaflet

| | | | |
|---|---|---|---|
| CCC Ex (Additional information) | 26.04.2023 | pdf<br>159.76 KB | |

### Application Notes

#### Application Note CoDeSys 2.3

| | | | |
|---|---|---|---|
| Using the Profile401_1 library for data exchange between WAGO CANopen devices (a112600) | 1.0.0<br>19.05.2003 | zip<br>321.55 KB | |


Continued on next page

## CAD/CAE-Data

| CAD data | CAE data |
|---|---|
| 2D/3D Models 750-337 | EPLAN Data Portal 750-337 |
| | WSCAD Universe 750-337 |
| | ZUKEN Portal 750-337 |

## Runtime Software

| Firmware | | | |
|---|---|---|---|
| 0750-0337, Feldbuskoppler CANopen; MCS | V 23<br>18.10.2021 | zip<br>713.60 KB | |

## Device Files

| Device Driver | | | |
|---|---|---|---|
| WAGO USB Service Kabel Treiber / Serie 750 und 857 | 6.5.3.0<br>10.09.2014 | zip<br>4721.96 KB | |

## Libraries

| Device Description File | | | |
|---|---|---|---|
| 750-914; EDS file for CANopen / 750, 752 and 767 Series | XT<br>12.03.2021 | zip<br>1728.38 KB | |

# 1 Compatible Products

## 1.1 Optional Accessories

### 1.1.1 Communication

#### 1.1.1.1 Communication cable

Item No.: 750-923
Configuration cable; USB connector; Length: 2.5 m

Item No.: 750-923/000-001
Configuration cable; USB connector; Length: 5 m


Continued on next page

## 1.1.2 DIN-rail

### 1.1.2.1 Mounting accessories

Item No.: 210-196
Aluminum carrier rail; 35 x 8.2 mm; 1.6 mm thick; 2 m long; unslotted; similar to EN 60715; silver-colored

Item No.: 210-198
Copper carrier rail; 35 x 15 mm; 2.3 mm thick; 2 m long; unslotted; according to EN 60715; copper-colored

Item No.: 210-197
Steel carrier rail; 35 x 15 mm; 1.5 mm thick; 2 m long; slotted; similar to EN 60715; silver-colored

Item No.: 210-114
Steel carrier rail; 35 x 15 mm; 1.5 mm thick; 2 m long; unslotted; similar to EN 60715; silver-colored

Item No.: 210-118
Steel carrier rail; 35 x 15 mm; 2.3 mm thick; 2 m long; unslotted; according to EN 60715; silver-colored

Item No.: 210-112
Steel carrier rail; 35 x 7.5 mm; 1 mm thick; 2 m long; slotted; according to EN 60715; "Hole width 25 mm; silver-colored

Item No.: 210-113
Steel carrier rail; 35 x 7.5 mm; 1 mm thick; 2 m long; unslotted; according to EN 60715; silver-colored

## 1.1.3 Marking

### 1.1.3.1 Group marker carrier

Item No.: 750-106
Group marker carrier

### 1.1.3.2 Marker

Item No.: 750-100
Marker card; as a DIN A4 sheet; plain

Item No.: 2009-145/000-006
Mini-WSB Inline; for Smart Printer; 1700 pieces on roll; stretchable 5 - 5.2 mm; plain; snap-on type; blue

Item No.: 2009-145/000-007
Mini-WSB Inline; for Smart Printer; 1700 pieces on roll; stretchable 5 - 5.2 mm; plain; snap-on type; gray

Item No.: 2009-145/000-023
Mini-WSB Inline; for Smart Printer; 1700 pieces on roll; stretchable 5 - 5.2 mm; plain; snap-on type; green

Item No.: 2009-145/000-012
Mini-WSB Inline; for Smart Printer; 1700 pieces on roll; stretchable 5 - 5.2 mm; plain; snap-on type; orange

Item No.: 2009-145/000-005
Mini-WSB Inline; for Smart Printer; 1700 pieces on roll; stretchable 5 - 5.2 mm; plain; snap-on type; red

Item No.: 2009-145/000-024
Mini-WSB Inline; for Smart Printer; 1700 pieces on roll; stretchable 5 - 5.2 mm; plain; snap-on type; violet

Item No.: 2009-145
Mini-WSB Inline; for Smart Printer; 1700 pieces on roll; stretchable 5 - 5.2 mm; plain; snap-on type; white

Item No.: 2009-145/000-002
Mini-WSB Inline; for Smart Printer; 1700 pieces on roll; stretchable 5 - 5.2 mm; plain; snap-on type; yellow

Item No.: 248-501/000-006
Mini-WSB marking card; as card; not stretchable; plain; snap-on type; blue

Item No.: 248-501/000-007
Mini-WSB marking card; as card; not stretchable; plain; snap-on type; gray

Item No.: 248-501/000-023
Mini-WSB marking card; as card; not stretchable; plain; snap-on type; green

Item No.: 248-501/000-017
Mini-WSB marking card; as card; not stretchable; plain; snap-on type; light green

Item No.: 248-501/000-012
Mini-WSB marking card; as card; not stretchable; plain; snap-on type; orange

Item No.: 248-501/000-005
Mini-WSB marking card; as card; not stretchable; plain; snap-on type; red

Item No.: 248-501/000-024
Mini-WSB marking card; as card; not stretchable; plain; snap-on type; violet

Item No.: 248-501
Mini-WSB marking card; as card; not stretchable; plain; snap-on type; white

Item No.: 248-501/000-002
Mini-WSB marking card; as card; not stretchable; plain; snap-on type; yellow


Continued on next page

### 1.1.3.3 Marker carrier

Item No.: 750-103
Group marker carrier

## 1.1.4 Shield termination

### 1.1.4.1 Shield clamping saddles

Item No.: 790-108
Shield clamping saddle; 11 mm wide; diameter of compatible conductor; 3 … 8 mm

Item No.: 790-208
Shield clamping saddle; 12.4 mm wide; 3 … 8 mm

Item No.: 790-116
Shield clamping saddle; 19 mm wide; diameter of compatible conductor; 7 … 16 mm

Item No.: 790-216
Shield clamping saddle; 21.8 mm wide; 6 … 16 mm

Item No.: 790-124
Shield clamping saddle; 27 mm wide; diameter of compatible conductor; 6 … 24 mm

Item No.: 790-220
Shield clamping saddle; 30 mm wide; 6 … 20 mm

Item No.: 790-140
Shield clamping saddle; diameter of compatible conductor

## 1.1.5 System enclosure

### 1.1.5.1 System enclosure

Item No.: 850-825
IP65 enclosure; Aluminium (RAL 7032); WxHxD (160x100x160 mm); 9 x M12, 4 x M20

Item No.: 850-826
IP65 enclosure; Aluminium (RAL 7032); WxHxD (240x100x160 mm); 4 x M20, 4 x M16, 14 x M12 cable grip

Item No.: 850-827
IP65 enclosure; Aluminium (RAL 7032); WxHxD (320x100x160 mm); 4 x M20, 8 x M16, 17 x M12 cable grip

Item No.: 850-828
IP65 enclosure; Aluminium (RAL 7032); WxHxD (480x100x160 mm); 4 x M20, 10 x M16, 35 x M12 cable grip

Item No.: 850-826/002-000
IP65 enclosure; Aluminium (RAL 7035); WxHxD (240x100x160 mm); 4 x M20, 4 x M16, 14 x M12 cable grip

Item No.: 850-827/002-000
IP65 enclosure; Aluminium (RAL 7035); WxHxD (320x100x160 mm); 4 x M20, 8 x M16, 17 x M12 cable grip

Item No.: 850-828/002-000
IP65 enclosure; Aluminium (RAL 7035); WxHxD (480x100x160 mm); 4 x M20, 10 x M16, 35 x M12 cable grip

Item No.: 850-834
IP65 enclosure; Polyester (RAL 7032); WxHxD (164x100x164 mm); 9 x M12, 4 x M20

Item No.: 850-835
IP65 enclosure; Polyester (RAL 7032); WxHxD (244x100x164 mm); 4 x M20, 4 x M16, 14 x M12 cable grip

Item No.: 850-836
IP65 enclosure; Polyester (RAL 7032); WxHxD (324x100x164 mm); 4 x M20, 8 x M16, 17 x M12 cable grip

Item No.: 850-814/002-000
IP65 enclosure; Sheet steel (RAL 7035); WxHxD (200x120x200 mm); without flange plate

Item No.: 850-815/002-000
IP65 enclosure; Sheet steel (RAL 7035); WxHxD (300x120x200 mm); without flange plate

Item No.: 850-816/002-000
IP65 enclosure; Sheet steel (RAL 7035); WxHxD (400x120x200 mm); without flange plate

Item No.: 850-817/002-000
IP65 enclosure; Sheet steel (RAL 7035); WxHxD (600x120x200 mm); without flange plate