Data Sheet | Item Number: 734-369

2-conductor combi strip; 100% protected against mismating; 1.5 mm²; 9-pole; Pin spacing 3.5 mm; light gray

https://www.wago.com/734-369

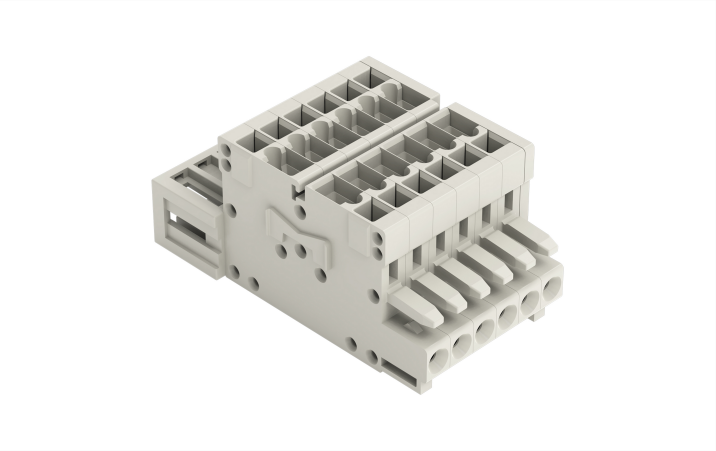

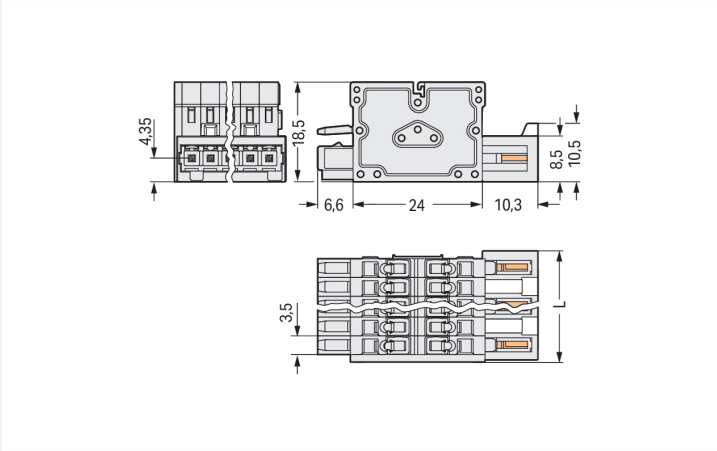

Color: light gray

Similar to illustration

Dimensions in mm
L = (pole no. – 1) x pin spacing + 5.9 mm + 0.45 mm

Distribution connector, 734 Series, 0 ° conductor exit to connection direction

Enjoy convenient electrical installations with this distribution connector (item number 734-369). Strip lengths must be between 6 and 7 mm when connecting conductors to this distribution connector. This product incorporates one conductor terminal and utilizes CAGE CLAMP®. Our proven universal connection known as CAGE CLAMP® leads the way when it comes to connection technology and electrical interconnections. The dimensions are (34.35 x 18.5 x 40.9) mm (width x height x depth). This distribution connector is suitable for conductor cross sections ranging from 0.08 mm² to 1.5 mm².

The contact surface is coated with tin.

Notes

Safety Information	The *MCS – MULTI CONNECTION SYSTEM* includes connectors without breaking capacity in accordance with DIN EN 61984. When used as intended, these connectors must not be connected/disconnected when live or under load.When used as intended, these connectors must not be connected/disconnected when live or under load. The circuit design should ensure header pins, which can be touched, are not live when unmated.
Variants:	Other pole numbers Other versions (or variants) can be requested from WAGO Sales or configured at https://configurator.wago.com/.

Electrical data

Ratings per	IEC/EN 60664-1		
Overvoltage category	III	III	II
Pollution degree	3	2	2
Nominal voltage	160 V	160 V	320 V
Rated impulse withstand voltage	2.5 kV	2.5 kV	2.5 kV
Rated current	10 A	10 A	10 A

Approvals per	UL 1059		
Use group	B	C	D
Rated voltage	300 V	-	300 V
Rated current	10 A	-	10 A

Continued on next page

Approvals per	CSA		
Use group	B	C	D
Rated voltage	300 V	-	300 V
Rated current	10 A	-	10 A

Connection Data

Clamping units	18
Total number of potentials	9
Number of connection types	1
Number of levels	1

Connection 1

Connection technology	CAGE CLAMP®
Actuation type	Operating tool
Actuation direction 1	Operation parallel to conductor entry
Actuation direction 2	Operation perpendicular to conductor entry
Solid conductor	0.08 … 1.5 mm² / 28 … 14 AWG
Fine-stranded conductor	0.08 … 1.5 mm² / 28 … 14 AWG
Fine-stranded conductor; with insulated ferrule	0.25 … 1.5 mm²
Fine-stranded conductor; with uninsulated ferrule	0.25 … 1.5 mm²
Note (conductor cross-section)	Terminating 1.5 mm² conductors is possible; however insulation diameter does not allow clamping units to be terminated in a row.
Strip length	6 … 7 mm / 0.24 … 0.28 inches
Pole number	9
Conductor entry direction to mating direction	0 °

Physical data

Pin spacing	3.5 mm / 0.138 inches
Width	34.35 mm / 1.352 inches
Height	18.5 mm / 0.728 inches
Depth	40.9 mm / 1.61 inches

Mechanical data

Variable coding	Yes
Anti-rotation protection	Yes

Plug-in connection

Contact type (pluggable connector)	Distribution connector
Connector (connection type)	for conductor
Mismating protection	Yes

Material data

Note (material data)	Information on material specifications can be found here
Color	light gray
Material group	I
Insulation material (main housing)	Polyamide (PA66)
Flammability class per UL94	V0
Clamping spring material	Chrome-nickel spring steel (CrNi)
Contact material	Copper alloy
Contact Plating	Tin
Fire load	0.295 MJ
Weight	21.3 g

 Continued on next page

Environmental requirements

Limit temperature range	-60 … +100 °C
Processing temperature	-35 … +60 °C

Commercial data

Product Group	3 (Multi Conn. System)
PU (SPU)	25 pcs
Packaging type	Box
Country of origin	PL
GTIN	4045454214593
Customs tariff number	85366990990

Product Classification

UNSPSC	39121409
eCl@ss 10.0	27-14-11-06
eCl@ss 9.0	27-14-11-06
ETIM 9.0	EC001284
ETIM 10.0	EC001284
ECCN	NO US CLASSIFICATION

Environmental Product Compliance

RoHS Compliance Status	Compliant,No Exemption

Approvals / Certificates

General approvals

Approval	Standard	Certificate Name
CB DEKRA Certification B.V.	EN 61984	NL-54190
CSA DEKRA Certification B.V.	C22.2	1465035
KEMA/KEUR DEKRA Certification B.V.	EN 61984	71-105522

Approvals for marine applications

Approval	Standard	Certificate Name
DNV DNV GL SE	-	TAE000016Z
LR Lloyds Register	IEC 61984	96/20035 (E5)
PRS Polski Rejestr Statków	-	TE/1095/880590/23

Downloads

Environmental Product Compliance

Compliance Search

Environmental Product Compliance 734-369

Continued on next page

Documentation

Additional Information

Technical Section	03.04.2019	pdf 2027.26 KB	

CAD/CAE-Data

CAD data

2D/3D Models 734-369

CAE data

EPLAN Data Portal
734-369

ZUKEN Portal 734-369

1 Compatible Products

1.1 System counterpart

1.1.1 Female connector/socket

Item No.: 734-109
1-conductor female connector; CAGE CLAMP®; 1.5 mm²; Pin spacing 3.5 mm; 9-pole; 100% protected against mismating; light gray

1.1.2 Male connector/plug

Item No.: 734-309
1-conductor male connector; CAGE CLAMP®; 1.5 mm²; Pin spacing 3.5 mm; 9-pole; 100% protected against mismating; light gray

1.2 Optional Accessories

1.2.1 Coding

1.2.1.1 Coding

Item No.: 734-159
Coding key; to be snapped above top level; black

Item No.: 734-130
Coding key; to be snapped above top level; white

 Continued on next page

1.2.2 Cover

1.2.2.1 Cover

Item No.: 734-420
Cover for male connectors; for 734 Series; IP20 protection; black

1.2.3 Ferrule

1.2.3.1 Ferrule

Item No.: 216-321
Ferrule; Sleeve for 0.25 mm² / AWG 24; insulated; electro-tin plated; yellow

Item No.: 216-131
Ferrule; Sleeve for 0.25 mm² / AWG 24; uninsulated; electro-tin plated; silver-colored

Item No.: 216-322
Ferrule; Sleeve for 0.34 mm² / 22 AWG; insulated; electro-tin plated; light turquoise

Item No.: 216-132
Ferrule; Sleeve for 0.34 mm² / 22 AWG; uninsulated; electro-tin plated

Item No.: 216-221
Ferrule; Sleeve for 0.5 mm² / 20 AWG; insulated; electro-tin plated; white

Item No.: 216-121
Ferrule; Sleeve for 0.5 mm² / AWG 22; uninsulated; electro-tin plated; silver-colored

Item No.: 216-222
Ferrule; Sleeve for 0.75 mm² / 18 AWG; insulated; electro-tin plated; gray

Item No.: 216-122
Ferrule; Sleeve for 0.75 mm² / 18 AWG; uninsulated; electro-tin plated; silver-colored

Item No.: 216-223
Ferrule; Sleeve for 1 mm² / AWG 18; insulated; electro-tin plated; red

Item No.: 216-123
Ferrule; Sleeve for 1 mm² / AWG 18; uninsulated; electro-tin plated; silver-colored

Item No.: 216-224
Ferrule; Sleeve for 1.5 mm² / AWG 16; insulated; electro-tin plated; black

Item No.: 216-124
Ferrule; Sleeve for 1.5 mm² / AWG 16; uninsulated; electro-tin plated

1.2.4 Marking

1.2.4.1 Marking strip

Item No.: 210-332/350-202
Marking strips; as a DIN A4 sheet; MARKED; 1-16 (240x); Height of marker strip: 3 mm; Strip length 182 mm; Horizontal marking; Self-adhesive; white

Item No.: 210-332/350-204
Marking strips; as a DIN A4 sheet; MARKED; 17-32 (240x); Height of marker strip: 3 mm; Strip length 182 mm; Horizontal marking; Self-adhesive; white

Item No.: 210-332/350-206
Marking strips; as a DIN A4 sheet; MARKED; 33-48 (240x); Height of marker strip: 3 mm; Strip length 182 mm; Horizontal marking; Self-adhesive; white

1.2.5 Strain relief

1.2.5.1 Strain relief plate

Item No.: 734-129
Strain relief plate; for female and male connectors; 25 mm wide; 1 part; Pin spacing 3.5 mm; light gray

Continued on next page

1.2.6 Test and measurement

1.2.6.1 Testing accessories

Item No.: 735-500
WAGO Test pin; 1 mm Ø; 30 V AC / 60 V DC; CAT0; 1 A; 6 mm uninsulated; Test lead for soldering up to 0,5mm²