Data Sheet | Item Number: 286-508

Relay module; Nominal input voltage: 230 VAC; 1 changeover contact; Limiting continuous current: 7 A; Red status indicator; Module width: 15 mm; gray

https://www.wago.com/286-508

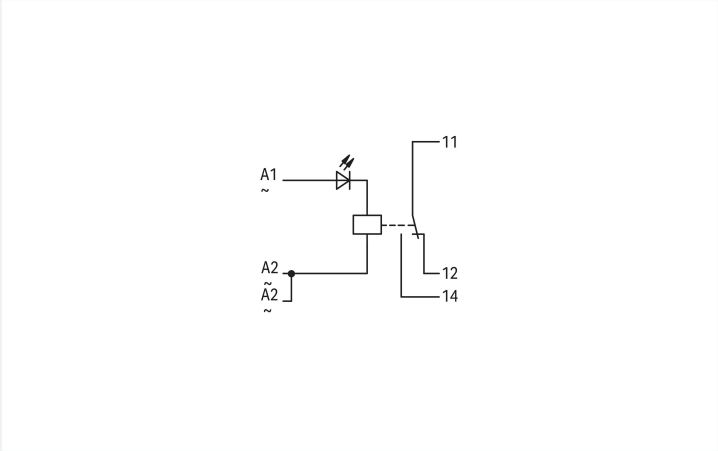

Color: gray

Similar to illustration

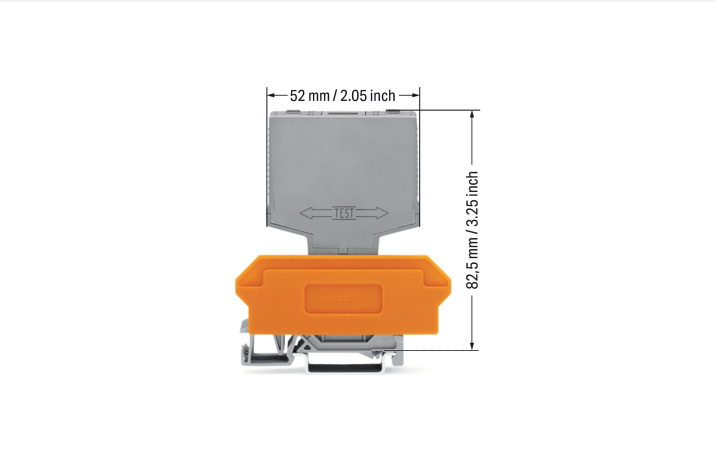

Technical data

Control circuit

Nominal input voltage U_N	230 VAC
Input voltage range	±10 %
Nominal input current at U_N	4 mA

Load circuit

Number of changeover/switchover contacts	1
Contact material (relay)	AgNi 0.15
Limiting continuous current	7 A
Switching Voltage, Max.	250 VAC
Switching power (resistive) max.	AC 1750 VA
Pull-in time (typ.)	8 ms
Drop-out time (typ.)	6 ms
Bounce time (typ.)	4 ms
Electrical life (NO; resistive load; 23 °C)	100 x 10^3 switching operations
Mechanical life	30 x 10^6 switching operations

Continued on next page

Signaling

Status indicator	Red LED

Safety and protection

Rated Voltage	300 V
Rated impulse withstand voltage	4 kV
Overvoltage category	II
Pollution degree	2
Dielectric strength (control/load circuit) (AC, 1 min)	4 kVrms
Dielectric strength (open contact) (AC, 1 min)	1 kVrms
Insulation type (control/load circuit)	Reinforced insulation (safe isolation)
Insulation type (between adjacent devices of the same type)	Double insulation (safe isolation)
Insulation type (to adjacent devices of different types)	Basic insulation
Protection type	IP20

Physical data

Width	15 mm / 0.591 inches
Height	52 mm / 2.047 inches
Depth from upper-edge of DIN-rail	82.5 mm / 3.248 inches
Note (dimensions)	Depth including carrier terminal block

Mechanical data

Mounting type	Pluggable module for receptacle terminal blocks

Material data

Note (material data)	Information on material specifications can be found here
Color	gray
Fire load	0.293 MJ
Weight	30.6 g

Environmental requirements

Ambient temperature (operation at U_N)	-25 … +40 °C
Ambient temperature (storage)	-25 … +70 °C
Processing temperature	-25 … +50 °C
Temperature range of connection cable	≥ ($T_{ambient}$ + 35 K)
Relative humidity	5 … 75 % (no condensation permissible)
Operating altitude (max.)	2000 m

Standards and Specifications

Standards/specifications	EN 61010-2-201

 Continued on next page

Commercial data

Product Group	6 (INTERFACE ELECTRONIC)
PU (SPU)	15 (1) pcs
Packaging type	Box
Country of origin	DE
GTIN	4045454560058
Customs tariff number	85364900990

Product Classification

UNSPSC	39122334
eCl@ss 10.0	27-37-16-01
eCl@ss 9.0	27-37-16-01
ETIM 9.0	EC001437
ETIM 10.0	EC001437
ECCN	NO US CLASSIFICATION

Environmental Product Compliance

RoHS Compliance Status	Compliant,No Exemption
SCIP notification number (Austria)	a831fa41-902b-448d-8708-df84f5d7ce18
SCIP notification number (Belgium)	8700ad89-07b6-4e62-be0e-a0a642011f1a
SCIP notification number (Bulgaria)	0c34640b-59d7-482f-b5f8-63fb7d2ad751
SCIP notification number (Czech Republic)	b1cd5ba9-fa4d-4888-86e5-409c84102a41
SCIP notification number (Denmark)	fba882a1-da22-4d7b-8f65-d15634496562
SCIP notification number (Finland)	8a1af4b8-6cdf-48ad-a410-4b270d3107ef
SCIP notification number (France)	bab64cf2-1fc8-4aba-92f8-b0d7f938c19d
SCIP notification number (Germany)	a0ec7c04-f8ed-456d-ac92-9c1237675c40
SCIP notification number (Hungary)	68b35ee8-a788-4525-9f12-4e43283a3192
SCIP notification number (Italy)	8d40aba2-1081-4917-8763-a461206eb294
SCIP notification number (Netherlands)	f84b3362-893e-4499-84e9-eb56e58e4e4d
SCIP notification number (Poland)	7897a7aa-7620-47a5-97d9-66d501bd3341
SCIP notification number (Romania)	ef26a14d-9a95-4664-8471-8cb204157e03
SCIP notification number (Sweden)	91af85f1-d12c-46f4-b43a-932a24d790a4

Approvals / Certificates

General approvals

Approval	Standard	Certificate Name
EAC GZO Almaty Standart	TP TC 004/2011	EAC CoC 03078

Declarations of conformity and manufacturer's declarations

Approval	Standard	Certificate Name
EU-Declaration of Conformity WAGO GmbH & Co. KG	-	-

 Continued on next page

Downloads

Environmental Product Compliance

Compliance Search

Environmental Product Compliance 286-508

Documentation

Bid Text

286-508	19.02.2019	xml 3.69 KB	
286-508	22.03.2018	doc 26.00 KB	

Instruction Leaflet

Operation and Assembly Instructions Interface	V 1.0.0 02.04.2025	pdf 1246.19 KB	

CAD/CAE-Data

CAD data

2D/3D Models 286-508

CAE data

WSCAD Universe 286-508

ZUKEN Portal 286-508

1 Compatible Products

1.1 Optional Accessories

1.1.1 Marking

1.1.1.1 Marker

Item No.: 209-701
WSB marking card; as card; not stretchable; plain; snap-on type; white

1.1.2 Terminal blocks

1.1.2.1 Terminal block for pluggable modules

Item No.: 280-619
Terminal block for pluggable modules; 6-pole; with 2-conductor terminal blocks; with orange separator; for DIN-rail 35 x 15 and 35 x 7.5; 2.5 mm²; CAGE CLAMP®; 2,50 mm²; gray

Item No.: 280-763
Terminal block for pluggable modules; 6-pole; with 4-conductor terminal blocks; with marker carrier; with orange separator; for DIN-rail 35 x 15 and 35 x 7.5; 2.5 mm²; CAGE CLAMP®; 2,50 mm²; gray

Item No.: 280-609
Terminal block for pluggable modules; 6-pole; with 4-conductor terminal blocks; with orange separator; for DIN-rail 35 x 15 and 35 x 7.5; 2.5 mm²; CAGE CLAMP®; 2,50 mm²; gray

 Continued on next page

Installation Notes

Installation

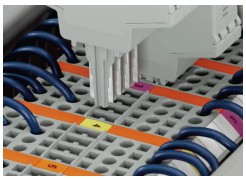

Coding ensures correct polarity.

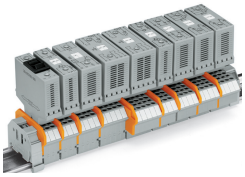

Pluggable electronic modules on 2- or 4-conductor carrier terminal blocks

Marking

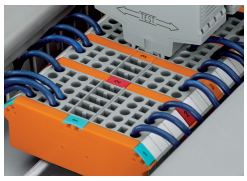

Marking via WMB Multi Marking System.

Testing

Function testing via touch-proof test slots