Data Sheet | Item Number: 286-316

Relay module; Nominal input voltage: 220 VDC; 2 changeover contacts; Limiting continuous current: 7 A; Red status indicator; Module width: 20 mm; gray

https://www.wago.com/286-316

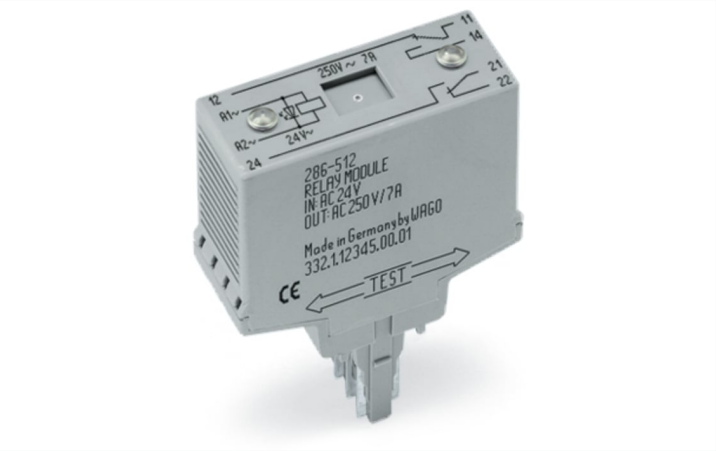

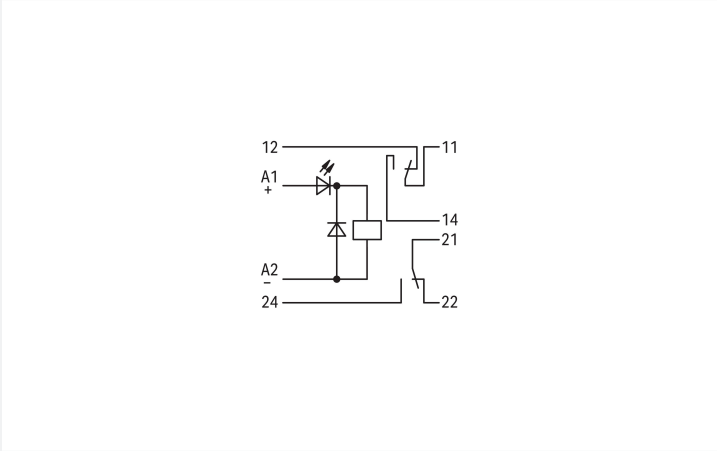

Color: gray

Similar to illustration

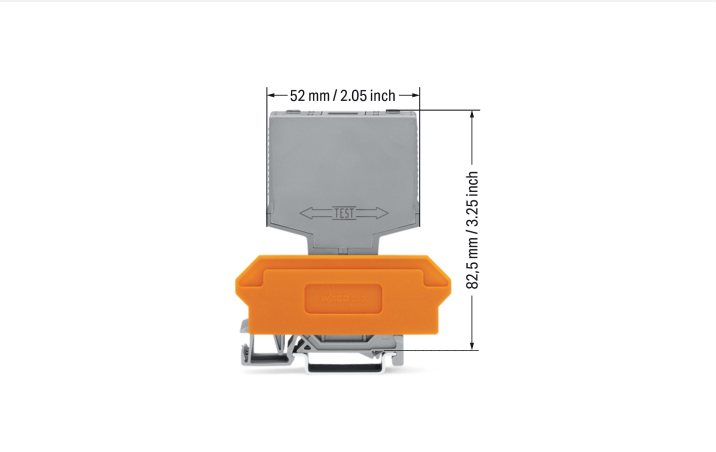

Technical data

Control circuit

Nominal input voltage U_N	220 VDC
Input voltage range	±10 %
Nominal input current at U_N	5 mA

Load circuit

Number of changeover/switchover contacts	2
Contact material (relay)	AgNi 0.15
Limiting continuous current	7 A
Switching Voltage, Max.	250 VAC
Switching power (resistive) max.	AC 1750 VA
Pull-in time (typ.)	18 ms
Drop-out time (typ.)	3 ms
Bounce time (typ.)	2 ms
Electrical life (NO; resistive load; 23 °C)	100 x 10^3 switching operations
Mechanical life	30 x 10^6 switching operations

Continued on next page

Signaling

Status indicator	Red LED

Safety and protection

Rated Voltage	250 V
Rated impulse withstand voltage	4 kV
Pollution degree	2
Dielectric strength (control/load circuit) (AC, 1 min)	2 kVrms
Dielectric strength (open contact) (AC, 1 min)	1 kVrms
Dielectric strength (load/load circuit) (AC, 1 min)	1.5 kVrms
Protection type	IP20

Physical data

Width	20 mm / 0.787 inches
Height	52 mm / 2.047 inches
Depth from upper-edge of DIN-rail	82.5 mm / 3.248 inches
Note (dimensions)	Depth including carrier terminal block

Mechanical data

Mounting type	Pluggable module for receptacle terminal blocks

Material data

Note (material data)	Information on material specifications can be found here
Color	gray
Fire load	0.354 MJ
Weight	39.9 g

Environmental requirements

Ambient temperature (operation at U_N)	-25 … +40 °C
Ambient temperature (storage)	-25 … +70 °C
Processing temperature	-25 … +50 °C
Relative humidity	5 … 85 % (no condensation permissible)
Operating altitude (max.)	2000 m

Standards and Specifications

Standards/specifications	EN 60664-1

Commercial data

Product Group	6 (INTERFACE ELECTRONIC)
PU (SPU)	10 (1) pcs
Packaging type	Box
Country of origin	DE
GTIN	4045454553630
Customs tariff number	85364900990

 Continued on next page

Product Classification

UNSPSC	39122334
eCl@ss 10.0	27-37-16-01
eCl@ss 9.0	27-37-16-01
ETIM 9.0	EC001437
ETIM 10.0	EC001437
ECCN	NO US CLASSIFICATION

Environmental Product Compliance

CAS-No.	7439-92-1 79-94-7
REACH Candidate List Substance	2,2',6,6'-tetrabromo-4,4'-isopropylidenediphenol Lead
RoHS Compliance Status	Compliant,With Exemption
RoHS Exemption	7(a)
SCIP notification number (Austria)	caf48449-c7ee-41e9-95e9-9c7347f5a471
SCIP notification number (Belgium)	19b3c68c-da4e-4fce-bbec-828212c1274e
SCIP notification number (Bulgaria)	0ad6742e-07e0-4988-b877-53302f4f6641
SCIP notification number (Czech Republic)	41b82857-80e3-4e9c-b1b0-020df7badcbd
SCIP notification number (Denmark)	1dc88fbd-b839-4a5f-9cdf-00658da2f389
SCIP notification number (Finland)	3257e224-f588-41ad-a739-b35461f564e7
SCIP notification number (France)	bb67425c-5805-4d57-9526-76cc55e71290
SCIP notification number (Germany)	9cce2dc6-4c1c-4f99-8137-9b75efeb9adb
SCIP notification number (Hungary)	b175298b-1f3e-423f-ba1a-7d9379d76843
SCIP notification number (Italy)	a439bf26-59b6-4da5-9464-6643e602a2d7
SCIP notification number (Netherlands)	5f468ac6-4287-4397-b076-c8a390ce95c3
SCIP notification number (Poland)	c5ca149a-06a8-4602-bd0a-45d0a40344c6
SCIP notification number (Romania)	984a7288-1d9a-4d9b-8752-7dabce81f526
SCIP notification number (Sweden)	f005a10c-679a-481f-a25c-9ed51aa27736

Approvals / Certificates

General approvals

Approval	Standard	Certificate Name
EAC GZO Almaty Standart	TP TC 004/2011	EAC CoC 03078

Downloads

Environmental Product Compliance

Compliance Search

Environmental Product Compliance 286-316

Continued on next page

Documentation

Bid Text

286-316	19.02.2019	xml 3.79 KB	
286-316	22.03.2018	doc 27.00 KB	

Instruction Leaflet

Operation and Assembly Instructions Interface	V 1.0.0 02.04.2025	pdf 1246.19 KB	

CAD/CAE-Data

CAD data

2D/3D Models 286-316

CAE data

WSCAD Universe
286-316

ZUKEN Portal 286-316

1 Compatible Products

1.1 Optional Accessories

1.1.1 Marking

1.1.1.1 Marker

Item No.: 209-701
WSB marking card; as card; not stretchable; plain; snap-on type; white

1.1.2 Terminal blocks

1.1.2.1 Terminal block for pluggable modules

Item No.: 280-638
Terminal block for pluggable modules; 8-pole; with 2-conductor terminal blocks; with orange separator; for DIN-rail 35 x 15 and 35 x 7.5; 2.5 mm²; CAGE CLAMP®; 2,50 mm²; gray

Item No.: 280-764
Terminal block for pluggable modules; 8-pole; with 4-conductor terminal blocks; with marker carrier; with orange separator; for DIN-rail 35 x 15 and 35 x 7.5; 2.5 mm²; CAGE CLAMP®; 2,50 mm²; gray

Item No.: 280-628
Terminal block for pluggable modules; 8-pole; with 4-conductor terminal blocks; with orange separator; for DIN-rail 35 x 15 and 35 x 7.5; 2.5 mm²; CAGE CLAMP®; 2,50 mm²; gray

Installation Notes

Installation

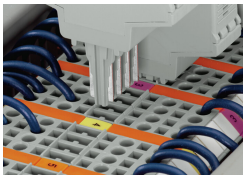

Coding ensures correct polarity.

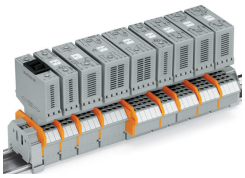

Pluggable electronic modules on 2- or 4-conductor carrier terminal blocks

Continued on next page

Marking

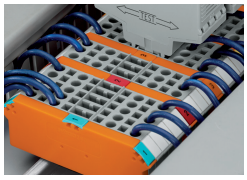

Marking via WMB Multi Marking System.

Testing

Function testing via touch-proof test slots