Data Sheet | Item Number: 285-1161

2-conductor through terminal block; 185 mm²; lateral marker slots; with fixing flanges; POWER CAGE CLAMP; 185,00 mm²; gray

https://www.wago.com/285-1161

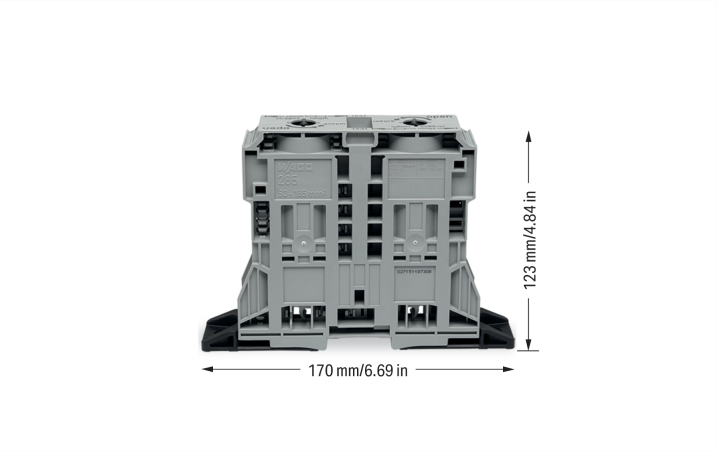

Color: gray

High-current terminal block, 285 Series, gray

Our through terminal block (item number 285-1161) is designed for seamless electrical installations. Ensure that the strip lengths are between 45 and 47 mm when connecting conductors to this through terminal block. This product features conductor terminals and utilizes POWER CAGE CLAMP. The POWER CAGE CLAMP is a reliable, maintenance-free, and universal way to connect large conductor cross-sections. It's also suitable for all conductor types. The clamping point can be locked open and you do not need to use a torque wrench or prepare the conductor in any way, e.g., by crimping the ferrule. This through terminal block is suitable for conductor cross sections ranging from 50 mm² to 185 mm².

Electrical data

Ratings per	IEC/EN 60947-7-1		
Overvoltage category	III	III	II
Pollution degree	3	2	2
Nominal voltage	1000 V	-	-
Rated impulse withstand voltage	12 kV	-	-
Rated current	353 A	-	-

Ratings per IEC/EN 2	
Rated voltage (III / 3)	1500 V
Rated impulse withstand voltage (III/3)	12 kV

Approvals per	UL 1059		
Use group	B	C	D
Rated voltage	600 V	600 V	-
Rated current	310 A	310 A	-

Approvals per	CSA 22.2 No 158		
Use group	B	C	D
Rated voltage	1000 V	1000 V	-
Rated current	310 A	-	-

Power Loss	
Power loss, per pole (potential)	11.2148 W
Rated current I_N for power loss specification	353 A
Resistance value for specified, current-dependent power loss	9e-005 Ω

General information	
Voltage type 1	AC/DC
Voltage type 2	DC
Wiring direction	Side-entry wiring

Continued on next page

Connection Data

Clamping units	2
Total number of potentials	1
Number of levels	1
Number of jumper slots	2

Connection 1

Connection technology	POWER CAGE CLAMP
Actuation type	T-wrench; 8 mm
Connectable conductor materials	Copper
Nominal cross-section	185 mm² / 350 kcmil
Solid conductor	50 … 185 mm² / 1/0 AWG … 350 kcmil
Stranded conductor	50 … 185 mm² / 1/0 AWG … 350 kcmil
Fine-stranded conductor	50 … 185 mm² / 1/0 AWG … 350 kcmil
Fine-stranded conductor; with insulated ferrule	50 … 150 mm² / 1/0 AWG … 300 kcmil
Fine-stranded conductor; with uninsulated ferrule	50 … 185 mm² / 1/0 AWG … 350 kcmil
Strip length	45 … 47 mm / 1.77 … 1.85 inches
Wiring direction	Side-entry wiring

Physical data

Width	32 mm / 1.26 inches
Height from the surface	123 mm / 4.843 inches
Depth	170 mm / 6.693 inches

Mechanical data

Mounting type	Mounting flange
Mounting type	Panel mounting
Marking level	Side marking

Material data

Note (material data)	Information on material specifications can be found here
Color	gray
Material group	I
Insulation material (main housing)	Polyamide (PA66)
Flammability class per UL94	V0
Fire load	4.85 MJ
Weight	552 g

Environmental requirements

Processing temperature	-35 … +85 °C
Continuous operating temperature	-60 … +105 °C

Commercial data

PU (SPU)	4 pcs
Packaging type	Box
Country of origin	DE
GTIN	4055143424141
Customs tariff number	85369010000

 Continued on next page

Product Classification

UNSPSC	39121410
eCl@ss 10.0	27-14-11-20
eCl@ss 9.0	27-14-11-20
ETIM 9.0	EC000897
ETIM 10.0	EC000897
ECCN	NO US CLASSIFICATION

Environmental Product Compliance

RoHS Compliance Status	Compliant,No Exemption

Approvals / Certificates

General approvals

Approval	Standard	Certificate Name
CCA DEKRA Certification B.V.	EN 60947	NTR NL 7965
CSA CSA Group	C22.2	1151144
KEMA/KEUR DEKRA Certification B.V.	EN 60947	71-126013
UL Underwriters Laboratories Inc.	UL 1059	20190731-E45172

Declarations of conformity and manufacturer's declarations

Approval	Standard	Certificate Name
EU-Declaration of Conformity WAGO GmbH & Co. KG	-	-
UK-Declaration of Conformity WAGO GmbH & Co. KG	-	-

Approvals for marine applications

Approval	Standard	Certificate Name
ABS American Bureau of Shipping	EN 60947	24-0152298-PDA

Downloads

Environmental Product Compliance

Compliance Search

Environmental Product Compliance 285-1161

Continued on next page

Documentation

Bid Text			
285-1161	19.02.2019	xml 3.92 KB	
285-1161	04.01.2018	doc 25.50 KB	

CAD/CAE-Data

CAD data	CAE data
2D/3D Models 285-1161	EPLAN Data Portal 285-1161
	ZUKEN Portal 285-1161

1 Compatible Products

1.1 Optional Accessories

1.1.1 Cover

1.1.1.1 Cover

Item No.: 285-1178
Finger guard; touchproof cover protects unused conductor entries and jumper slots; for 185 mm² high-current terminal blocks; yellow

1.1.2 Current and voltage tap

1.1.2.1 Current and voltage tap

Item No.: 855-1851/350-000
Current and voltage tap up to 185 mm²; Primary rated current: 350 A; Secondary rated current: 1 A; Rated power: 0.2 VA; Accuracy class: 0.5; fused

1.1.3 Ferrule

1.1.3.1 Ferrule

Item No.: 216-445
Ferrule; uninsulated; electro-tin plated

 Continued on next page

1.1.4 Installation

1.1.4.1 Mounting accessories

Item No.: 285-1179
Fixing element; for 185 mm² high-current terminal blocks; orange

1.1.5 Jumper

1.1.5.1 Jumper

Item No.: 285-1171
Jumper; insulated; gray

1.1.6 Marking

1.1.6.1 Marker

Item No.: 793-5501/000-006
WMB marking card; as card; for terminal block width 5 - 17.5 mm; stretchable 5 - 5.2 mm; plain; snap-on type; blue

Item No.: 793-5501/000-014
WMB marking card; as card; for terminal block width 5 - 17.5 mm; stretchable 5 - 5.2 mm; plain; snap-on type; brown

Item No.: 793-5501/000-007
WMB marking card; as card; for terminal block width 5 - 17.5 mm; stretchable 5 - 5.2 mm; plain; snap-on type; gray

Item No.: 793-5501/000-023
WMB marking card; as card; for terminal block width 5 - 17.5 mm; stretchable 5 - 5.2 mm; plain; snap-on type; green

Item No.: 793-5501/000-017
WMB marking card; as card; for terminal block width 5 - 17.5 mm; stretchable 5 - 5.2 mm; plain; snap-on type; light green

Item No.: 793-5501/000-012
WMB marking card; as card; for terminal block width 5 - 17.5 mm; stretchable 5 - 5.2 mm; plain; snap-on type; orange

Item No.: 793-5501/000-005
WMB marking card; as card; for terminal block width 5 - 17.5 mm; stretchable 5 - 5.2 mm; plain; snap-on type; red

Item No.: 793-5501/000-024
WMB marking card; as card; for terminal block width 5 - 17.5 mm; stretchable 5 - 5.2 mm; plain; snap-on type; violet

Item No.: 793-5501
WMB marking card; as card; for terminal block width 5 - 17.5 mm; stretchable 5 - 5.2 mm; plain; snap-on type; white

Item No.: 793-5501/000-002
WMB marking card; as card; for terminal block width 5 - 17.5 mm; stretchable 5 - 5.2 mm; plain; snap-on type; yellow

Item No.: 793-501/000-006
WMB marking card; as card; not stretchable; plain; snap-on type; blue

Item No.: 793-501/000-007
WMB marking card; as card; not stretchable; plain; snap-on type; gray

Item No.: 793-501/000-023
WMB marking card; as card; not stretchable; plain; snap-on type; green

Item No.: 793-501/000-017
WMB marking card; as card; not stretchable; plain; snap-on type; light green

Item No.: 793-501/000-012
WMB marking card; as card; not stretchable; plain; snap-on type; orange

Item No.: 793-501/000-005
WMB marking card; as card; not stretchable; plain; snap-on type; red

Item No.: 793-501/000-024
WMB marking card; as card; not stretchable; plain; snap-on type; violet

Item No.: 793-501
WMB marking card; as card; not stretchable; plain; snap-on type; white

Item No.: 793-501/000-002
WMB marking card; as card; not stretchable; plain; snap-on type; yellow

Item No.: 2009-115/000-006
WMB-Inline; for Smart Printer; 1500 pieces on roll; stretchable 5 - 5.2 mm; plain; snap-on type; blue

Item No.: 2009-115/000-007
WMB-Inline; for Smart Printer; 1500 pieces on roll; stretchable 5 - 5.2 mm; plain; snap-on type; gray

Item No.: 2009-115/000-023
WMB-Inline; for Smart Printer; 1500 pieces on roll; stretchable 5 - 5.2 mm; plain; snap-on type; green

Item No.: 2009-115/000-017
WMB-Inline; for Smart Printer; 1500 pieces on roll; stretchable 5 - 5.2 mm; plain; snap-on type; light green

Item No.: 2009-115/000-012
WMB-Inline; for Smart Printer; 1500 pieces on roll; stretchable 5 - 5.2 mm; plain; snap-on type; orange

Item No.: 2009-115/000-005
WMB-Inline; for Smart Printer; 1500 pieces on roll; stretchable 5 - 5.2 mm; plain; snap-on type; red

Item No.: 2009-115/000-024
WMB-Inline; for Smart Printer; 1500 pieces on roll; stretchable 5 - 5.2 mm; plain; snap-on type; violet

Item No.: 2009-115
WMB-Inline; for Smart Printer; 1500 pieces on roll; stretchable 5 - 5.2 mm; plain; snap-on type; white

Item No.: 2009-115/000-002
WMB-Inline; for Smart Printer; 1500 pieces on roll; stretchable 5 - 5.2 mm; plain; snap-on type; yellow

 Continued on next page

1.1.6.2 Marking strip

Item No.: 2009-110
Marking strips; for Smart Printer; 50 m on roll; not stretchable; plain; snap-on type; white

1.1.7 Power tap

1.1.7.1 Power tap

Item No.: 285-1175
Power tap; for 185 mm² high-current terminal blocks; gray

1.1.8 Protective warning marker

1.1.8.1 Cover

Item No.: 285-1177
Protective warning marker; with high-voltage symbol, black; yellow

Item No.: 285-1176
Protective warning marker; yellow

1.1.9 Tool

1.1.9.1 Operating tool

Item No.: 285-172
Allen wrench; with a partially insulated shaft; green

Item No.: 285-173
Allen wrench; with a partially insulated shaft; with anti-rotation protection; green

Installation Notes

Installation

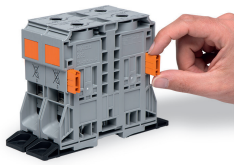

Optionally, insert block-to-block connector (285-1179) into housing slot.

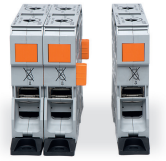

Align and snap high-current, through terminal blocks together.

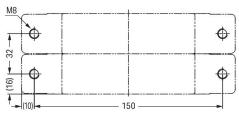

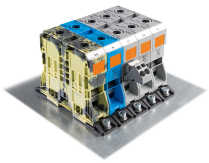

Secure the terminal block to a mounting plate using two M8 cylinder-head screws and appropriate washers.