Data Sheet | Item Number: 282-696

2-conductor fuse terminal block; for automotive blade-style fuses; with test option; without blown fuse indication; 6 mm²; CAGE CLAMP®; gray

https://www.wago.com/282-696

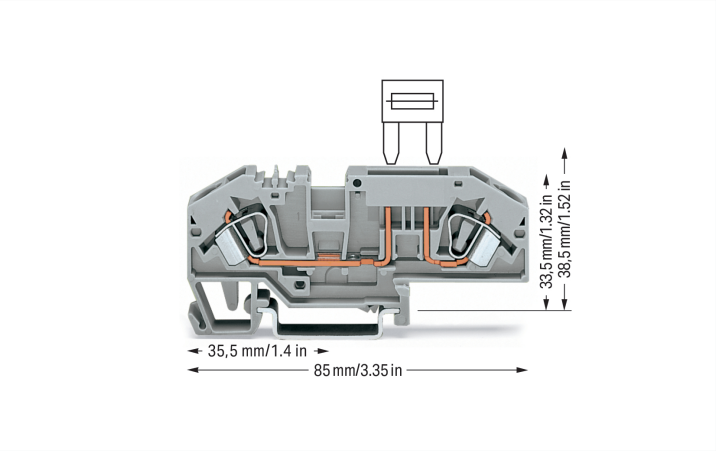

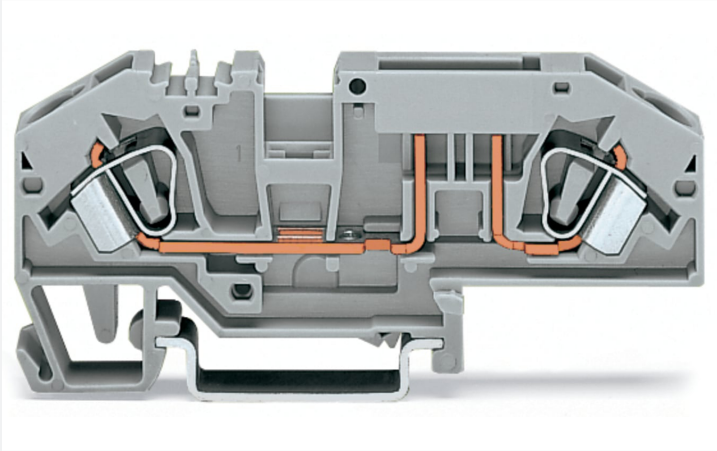

Color: gray

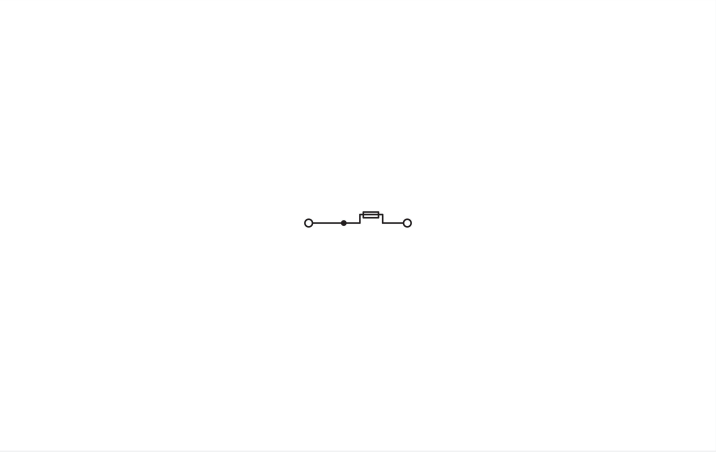

Fuse terminal block, 282 Series, operating tool

This fuse terminal block (item number 282-696) streamlines wire connections, making them both quick and easy. Strip lengths must be between 12 and 13 mm when connecting conductors to this fuse terminal block. This product features conductor terminals and utilizes CAGE CLAMP®. Our celebrated universal connection known as CAGE CLAMP® is the industry standard for connection technology and electrical interconnections. Depending on the type of conductor, this fuse terminal block is suitable for conductor cross sections ranging from 0.2 mm² to 6 mm².

Electrical data

Ratings per	IEC/EN 60947-7-3		
Overvoltage category	III	III	II
Pollution degree	3	2	2
Nominal voltage	400 V	-	-
Rated impulse withstand voltage	6 kV	-	-
Rated current	25 A	-	-
Current at conductor cross-section (max.) mm²	30 A	-	-

Ratings per IEC/EN – Notes	
Ratings (note)	Electrical ratings are given by the fuse.

Continued on next page

Ratings per IEC/EN 2

Ratings (note)	Blade-style fuses: Observe touch-proof protection for 42 V and higher voltages!

General information

Fuse receptacle	pluggable
Fuse type	Standard flat plug-in fuse; 19.1 x 5.1 x 18.5 mm
Wiring direction	Front-entry wiring

Connection Data

Clamping units	2
Total number of potentials	2
Number of levels	1

Connection 1

Connection technology	CAGE CLAMP®
Actuation type	Operating tool
Connectable conductor materials	Copper
Solid conductor	0.2 … 6 mm² / 24 … 10 AWG
Fine-stranded conductor	0.2 … 6 mm² / 24 … 10 AWG
Strip length	12 … 13 mm / 0.47 … 0.51 inches
Wiring direction	Front-entry wiring

Physical data

Width	8 mm / 0.315 inches
Height	85 mm / 3.346 inches
Depth from upper-edge of DIN-rail	33.5 mm / 1.319 inches

Mechanical data

Design	angled
Mounting type	DIN-35 rail
Marking level	Center marking

Material data

Note (material data)	Information on material specifications can be found here
Color	gray
Material group	I
Insulation material (main housing)	Polyamide (PA66)
Flammability class per UL94	V0
Fire load	0.293 MJ
Weight	17.3 g

Environmental requirements

Processing temperature	-35 … +85 °C
Continuous operating temperature	-60 … +105 °C

Commercial data

Product Group	1 (Rail Mounted Terminal Blocks)
PU (SPU)	25 pcs
Packaging type	Box
Country of origin	CN
GTIN	4050821234517
Customs tariff number	85369095000

 Continued on next page

Product Classification

UNSPSC	39121410
eCl@ss 10.0	27-14-11-16
eCl@ss 9.0	27-14-11-16
ETIM 9.0	EC000899
ETIM 10.0	EC000899
ECCN	NO US CLASSIFICATION

Environmental Product Compliance

RoHS Compliance Status	Compliant,No Exemption

Approvals / Certificates

General approvals

Approval	Standard	Certificate Name
CCA DEKRA Certification B.V.	EN 60947	NTR NL 8027
KEMA/KEUR DEKRA Certification B.V.	EN 60947	71-136074
UL Underwriters Laboratories Inc.	UL 1059	20190731-E45172

Declarations of conformity and manufacturer's declarations

Approval	Standard	Certificate Name
EU-Declaration of Conformity WAGO GmbH & Co. KG	-	-
UK-Declaration of Conformity WAGO GmbH & Co. KG	-	-

Downloads

Environmental Product Compliance

Compliance Search

Environmental Product Compliance 282-696

Documentation

Bid Text

282-696	19.02.2019	xml 3.58 KB	
282-696	09.03.2017	doc 25.00 KB	

 Continued on next page

CAD/CAE-Data

CAD data	CAE data
2D/3D Models 282-696	EPLAN Data Portal 282-696
	WSCAD Universe 282-696
	ZUKEN Portal 282-696

1 Compatible Products

1.1 Required Accessories

1.1.1 End plate

1.1.1.1 End plate

Item No.: 282-334
End plate; 2 mm thick; gray

Item No.: 282-333
End plate; 2 mm thick; orange

1.2 Optional Accessories

1.2.1 DIN-rail

1.2.1.1 Mounting accessories

Item No.: 210-196
Aluminum carrier rail; 35 x 8.2 mm; 1.6 mm thick; 2 m long; unslotted; similar to EN 60715; silver-colored

Item No.: 210-198
Copper carrier rail; 35 x 15 mm; 2.3 mm thick; 2 m long; unslotted; according to EN 60715; copper-colored

Item No.: 210-508
Steel carrier rail; 35 x 15 mm; 1.5 mm thick; 2 m long; slotted; galvanized; similar to EN 60715; silver-colored

Item No.: 210-197
Steel carrier rail; 35 x 15 mm; 1.5 mm thick; 2 m long; slotted; similar to EN 60715; silver-colored

Item No.: 210-506
Steel carrier rail; 35 x 15 mm; 1.5 mm thick; 2 m long; unslotted; galvanized; similar to EN 60715; silver-colored

Item No.: 210-114
Steel carrier rail; 35 x 15 mm; 1.5 mm thick; 2 m long; unslotted; similar to EN 60715; silver-colored

Item No.: 210-118
Steel carrier rail; 35 x 15 mm; 2.3 mm thick; 2 m long; unslotted; according to EN 60715; silver-colored

Item No.: 210-115
Steel carrier rail; 35 x 7.5 mm; 1 mm thick; 2 m long; slotted; according to EN 60715; "Hole width 18 mm; silver-colored

Item No.: 210-112
Steel carrier rail; 35 x 7.5 mm; 1 mm thick; 2 m long; slotted; according to EN 60715; "Hole width 25 mm; silver-colored

Item No.: 210-504
Steel carrier rail; 35 x 7.5 mm; 1 mm thick; 2 m long; slotted; galvanized; according to EN 60715; silver-colored

Item No.: 210-113
Steel carrier rail; 35 x 7.5 mm; 1 mm thick; 2 m long; unslotted; according to EN 60715; silver-colored

Item No.: 210-505
Steel carrier rail; 35 x 7.5 mm; 1 mm thick; 2 m long; unslotted; galvanized; according to EN 60715; silver-colored

Continued on next page

1.2.2 Ferrule

1.2.2.1 Ferrule

Item No.: 216-262
Ferrule; Sleeve for 0.75 mm² / 18 AWG; insulated; electro-tin plated; electrolytic copper; gastight crimped; acc. to DIN 46228, Part 4/09.90; gray

Item No.: 216-263
Ferrule; Sleeve for 1 mm² / AWG 18; insulated; electro-tin plated; electrolytic copper; gastight crimped; acc. to DIN 46228, Part 4/09.90; red

Item No.: 216-264
Ferrule; Sleeve for 1.5 mm² / AWG 16; insulated; electro-tin plated; electrolytic copper; gastight crimped; acc. to DIN 46228, Part 4/09.90; black

Item No.: 216-266
Ferrule; Sleeve for 2.5 mm² / AWG 14; insulated; electro-tin plated; electrolytic copper; gastight crimped; acc. to DIN 46228, Part 4/09.90; blue

Item No.: 216-267
Ferrule; Sleeve for 4 mm² / AWG 12; insulated; electro-tin plated; electrolytic copper; gastight crimped; acc. to DIN 46228, Part 4/09.90; gray

1.2.3 Installation

1.2.3.1 Cover

Item No.: 709-154
Cover; Type 2; suitable for cover carrier, type 2; 1 m long; transparent

1.2.3.2 Cover carrier

Item No.: 709-168
Cover carrier; Type 2; incl. fixing/retaining screws and knurled nut; suitable for 283 to 285 Series rail-mounted terminal blocks; suitable for 279 to 281 Series double- and triple-deck terminal blocks; suitable for 780 to 785, 775, 776 and 777 Series TOPJOB® rail-mounted terminal blocks; suitable for 280 Series sensor and actuator terminal blocks; suitable for 282 Series disconnect/test terminal blocks for transformer circuits; gray

1.2.3.3 Mounting accessories

Item No.: 209-106
Mounting carrier; for isolated mounting on DIN 35 rails; gray

Item No.: 249-116
Screwless end stop; 6 mm wide; for DIN-rail 35 x 15 and 35 x 7.5; gray

 Continued on next page

1.2.4 Jumper

1.2.4.1 Jumper

Item No.: 282-402
Jumper; insulated; gray

Item No.: 282-409
Jumper; insulated; gray

Item No.: 282-424
Jumper; insulated; orange

Item No.: 282-422
Jumper; insulated; yellow-green

Item No.: 709-110
Wire commoning chain; 2.5 mm²; insulated; black

Item No.: 709-111
Wire commoning chain; 2.5 mm²; insulated; black

Item No.: 709-112
Wire commoning chain; 2.5 mm²; insulated; black

1.2.5 Marking

1.2.5.1 Group marker carrier

Item No.: 209-143
Group marker carrier; gray

Item No.: 209-144
Group marker carrier; gray

Item No.: 249-105
Group marker carrier; gray

1.2.5.2 Marker

Item No.: 793-5501/000-006
WMB marking card; as card; for terminal block width 5 - 17.5 mm; stretchable 5 - 5.2 mm; plain; snap-on type; blue

Item No.: 793-5501/000-014
WMB marking card; as card; for terminal block width 5 - 17.5 mm; stretchable 5 - 5.2 mm; plain; snap-on type; brown

Item No.: 793-5501/000-007
WMB marking card; as card; for terminal block width 5 - 17.5 mm; stretchable 5 - 5.2 mm; plain; snap-on type; gray

Item No.: 793-5501/000-023
WMB marking card; as card; for terminal block width 5 - 17.5 mm; stretchable 5 - 5.2 mm; plain; snap-on type; green

Item No.: 793-5501/000-017
WMB marking card; as card; for terminal block width 5 - 17.5 mm; stretchable 5 - 5.2 mm; plain; snap-on type; light green

Item No.: 793-5501/000-012
WMB marking card; as card; for terminal block width 5 - 17.5 mm; stretchable 5 - 5.2 mm; plain; snap-on type; orange

Item No.: 793-5501/000-005
WMB marking card; as card; for terminal block width 5 - 17.5 mm; stretchable 5 - 5.2 mm; plain; snap-on type; red

Item No.: 793-5501/000-024
WMB marking card; as card; for terminal block width 5 - 17.5 mm; stretchable 5 - 5.2 mm; plain; snap-on type; violet

Item No.: 793-5501
WMB marking card; as card; for terminal block width 5 - 17.5 mm; stretchable 5 - 5.2 mm; plain; snap-on type; white

Item No.: 793-5501/000-002
WMB marking card; as card; for terminal block width 5 - 17.5 mm; stretchable 5 - 5.2 mm; plain; snap-on type; yellow

Item No.: 793-501/000-006
WMB marking card; as card; not stretchable; plain; snap-on type; blue

Item No.: 793-501/000-007
WMB marking card; as card; not stretchable; plain; snap-on type; gray

Item No.: 793-501/000-023
WMB marking card; as card; not stretchable; plain; snap-on type; green

Item No.: 793-501/000-017
WMB marking card; as card; not stretchable; plain; snap-on type; light green

Item No.: 793-501/000-012
WMB marking card; as card; not stretchable; plain; snap-on type; orange

Item No.: 793-501/000-005
WMB marking card; as card; not stretchable; plain; snap-on type; red

Item No.: 793-501/000-024
WMB marking card; as card; not stretchable; plain; snap-on type; violet

Item No.: 793-501
WMB marking card; as card; not stretchable; plain; snap-on type; white

Item No.: 793-501/000-002
WMB marking card; as card; not stretchable; plain; snap-on type; yellow

Item No.: 2009-115/000-006
WMB-Inline; for Smart Printer; 1500 pieces on roll; stretchable 5 - 5.2 mm; plain; snap-on type; blue

Item No.: 2009-115/000-007
WMB-Inline; for Smart Printer; 1500 pieces on roll; stretchable 5 - 5.2 mm; plain; snap-on type; gray

Item No.: 2009-115/000-023
WMB-Inline; for Smart Printer; 1500 pieces on roll; stretchable 5 - 5.2 mm; plain; snap-on type; green

Item No.: 2009-115/000-017
WMB-Inline; for Smart Printer; 1500 pieces on roll; stretchable 5 - 5.2 mm; plain; snap-on type; light green

Item No.: 2009-115/000-012
WMB-Inline; for Smart Printer; 1500 pieces on roll; stretchable 5 - 5.2 mm; plain; snap-on type; orange

Item No.: 2009-115/000-024
WMB-Inline; for Smart Printer; 1500 pieces on roll; stretchable 5 - 5.2 mm; plain; snap-on type; violet

Item No.: 2009-115
WMB-Inline; for Smart Printer; 1500 pieces on roll; stretchable 5 - 5.2 mm; plain; snap-on type; white

Item No.: 2009-115/000-002
WMB-Inline; for Smart Printer; 1500 pieces on roll; stretchable 5 - 5.2 mm; plain; snap-on type; yellow

Continued on next page

1.2.6 Protective warning marker

1.2.6.1 Cover

Item No.: 282-415
Protective warning marker; for 5 terminal blocks; with high-voltage symbol, black; yellow

1.2.7 Test and measurement

1.2.7.1 Testing accessories

Item No.: 709-311
B-type spacer module; modular; e.g., for bridging commoned terminal blocks; gray

Item No.: 709-310
B-type test plug module; modular; suitable for all WAGO 282 Series rail-mounted terminal blocks with jumper slots; 6,00 mm²; gray

Item No.: 209-170
Test plug adapter; 8.3 mm wide; for 4 mm Ø test plugs; suitable for 1.5 mm² - 10 mm² tbs; gray

Item No.: 210-136
Test plug; 2 mm Ø; with 500 mm cable; red

1.2.8 Tool

1.2.8.1 Operating tool

Item No.: 210-721
Operating tool; Blade: 5.5 x 0.8 mm; with a partially insulated shaft; multicoloured

Installation Notes

Testing

Testing via conductor entry.

Testing via jumper contact slot.

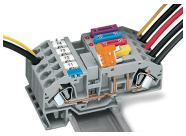

Power supply via disconnect link – disconnecting all outputs.

 Continued on next page

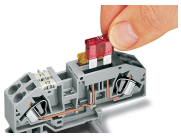

Inserting a fuse.

Blown fuse indication via LED

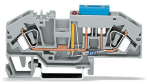

2-conductor fuse terminal block with mini-automotive blade-style fuse

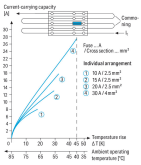

Application Notes on Terminal Blocks for Glass Cartridge Fuses
Diagram: “Individual Arrangement”

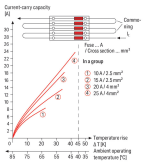

Application Notes on Terminal Blocks for Glass Cartridge Fuses
Diagram: “Block Arrangement”

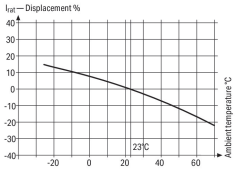

Application Notes on Terminal Blocks for Glass Cartridge Fuses
Nominal current ratings for fuse cartridges are defined differently in international standards. This is why the recommended continuous current-carrying capacity of the fuses is a max. 80% of their nominal current according to DIN 72581/Part 3 (for a surrounding air temperature of 23°C).
Selecting the correct fuse cartridge is important for product safety within applications, as well as for fuse cartridge service life and reliability. Fuse cartridges will only operate perfectly as protection components (break-off point) if they are properly selected and used as intended (i.e., according to the state of the technology and valid specifications, as well as data sheet characteristics), according to basic safety requirements (i.e., persons, animals and property must be protected against hazards).

Information from the mini-automotive, blade-type fuse manufacturers

Derating T_{amb} °C	%	F_T
−25	14	0,877
−20	13	0,885
−15	12	0,893
−10	11	0,901
− 5	10	0,909
0	9	0,917
5	8	0,926
10	6	0,943
15	4	0,952
20	2	0,980
23	0	1,000
30	− 2	1,020
35	− 4	1,042
40	− 6	1,064
45	− 8	1,087
50	− 10	1,111
55	− 13	1,149
60	−16	1,190
65	−19	1,235
70	− 22	1,282

Concerning product safety, fuse cartridges must generally be tested under both normal and faulty operating conditions within your application.