Data Sheet | Item Number: 280-520

Double-deck terminal block; Through/through terminal block; with additional jumper position on lower level; for DIN-rail 35 x 15 and 35 x 7.5; 2.5 mm²; CAGE CLAMP®; 2,50 mm²; gray/gray

https://www.wago.com/280-520

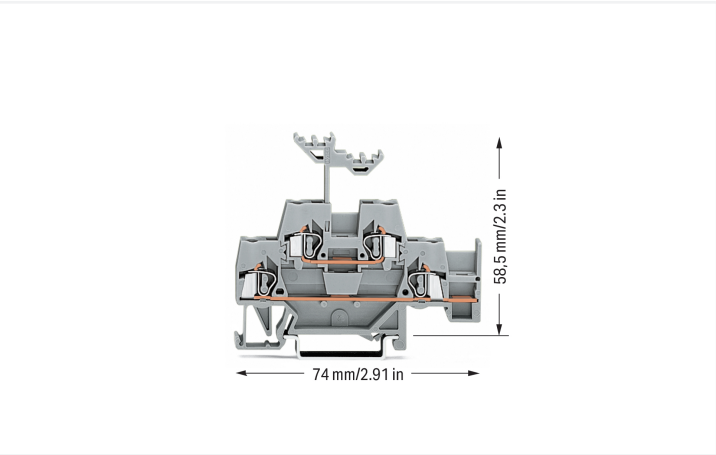

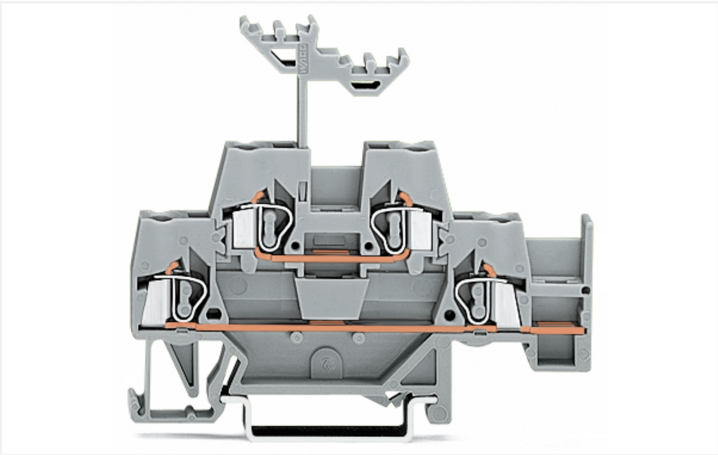

Color: gray/gray

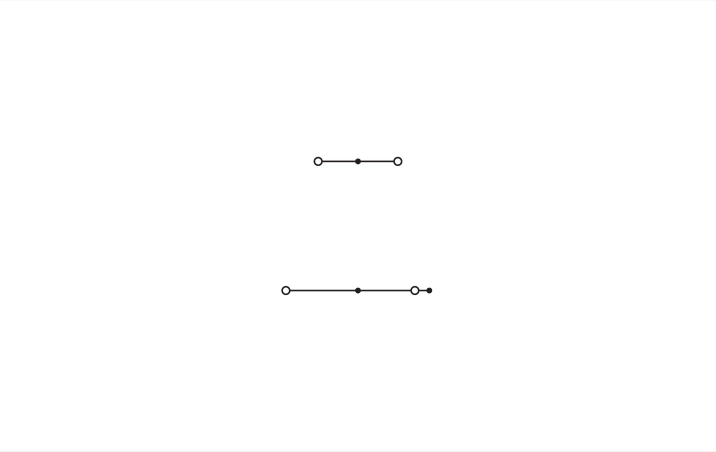

Similar to illustration

Double-deck terminal block, 280 Series, gray/gray

Enjoy easy electrical installations with this double-deck terminal block (item number 280-520). Ensure that the strip lengths are between 8 and 9 mm when connecting conductors to this double-deck terminal block. The double-deck terminal block also serves as a through terminal block. This product features conductor terminals and utilizes CAGE CLAMP®. Our reliable and maintenance-free CAGE CLAMP® connection makes it easy to connect all conductor types without having to prepare the conductor. For example, you don't need to crimp ferrules. Depending on the type of conductor, this double-deck terminal block is designed for conductor cross sections ranging from 0.08 mm² to 2.5 mm².

Electrical data

Ratings per	IEC/EN 60947-7-1		
Overvoltage category	III	III	II
Pollution degree	3	2	2
Nominal voltage	500 V	-	-
Rated impulse withstand voltage	6 kV	-	-
Rated current	20 A	-	-

Power Loss	
Power loss, per pole (potential)	0.532 W
Rated current I_N for power loss specification	20 A
Resistance value for specified, current-dependent power loss	0.00133 Ω

General information

Wiring direction	Front-entry wiring

Connection Data

Clamping units	4
Total number of potentials	2
Number of levels	2

Connection 1

Connection technology	CAGE CLAMP®
Actuation type	Operating tool
Connectable conductor materials	Copper Aluminum
Connectable conductor materials (note)	**Terminating Aluminum Conductors** WAGO Spring-Clamp Terminal Blocks are suitable for solid aluminum conductors up to 4 mm²/12 AWG if WAGO Aluminum Contact Paste 249-130 is used for termination. Aluminum Contact Paste Advantages: ▪ Automatically destroys the oxide film during clamping. ▪ Prevents fresh oxidation at the clamping point. ▪ Prevents electrolytic corrosion between aluminum and copper conductors (in the same terminal block). ▪ Provides long-term protection against corrosion. Using terminal blocks with CAGE CLAMP® Spring Pressure Connection Technology, **aluminum conductors must first be cleaned with a blade** and then immediately inserted into the clamping units filled with aluminum contact paste. It is also possible to apply WAGO Aluminum Contact Paste **additionally** on the whole surface of the aluminum conductor before termination. Please note that the nominal currents must be adapted to the reduced conductivity of the aluminum conductors:: 2.5 mm² = 16 A 4 mm² = 22 A
Solid conductor	0.08 … 2.5 mm² / 28 … 12 AWG
Fine-stranded conductor	0.08 … 2.5 mm² / 28 … 12 AWG
Note (conductor cross-section)	12 AWG: THHN, THWN
Strip length	8 … 9 mm / 0.31 … 0.35 inches
Wiring direction	Front-entry wiring

Physical data

Width	5 mm / 0.197 inches
Height	74 mm / 2.913 inches
Depth from upper-edge of DIN-rail	58.5 mm / 2.303 inches

 Continued on next page

Mechanical data

Design	horizontal type
Mounting type	DIN-35 rail
Marking level	Center marking

Material data

Note (material data)	Information on material specifications can be found here
Color	gray/gray
Material group	I
Insulation material (main housing)	Polyamide (PA66)
Flammability class per UL94	V0
Fire load	0.184 MJ
Weight	10.7 g

Environmental requirements

Processing temperature	-35 ... +85 °C
Continuous operating temperature	-60 ... +105 °C

Commercial data

Product Group	1 (Rail Mounted Terminal Blocks)
PU (SPU)	50 pcs
Packaging type	Box
Country of origin	CN
GTIN	4050821214908
Customs tariff number	85369010000

Product Classification

UNSPSC	39121410
eCl@ss 10.0	27-14-11-20
eCl@ss 9.0	27-14-11-20
ETIM 9.0	EC000897
ETIM 10.0	EC000897
ECCN	NO US CLASSIFICATION

Environmental Product Compliance

RoHS Compliance Status	Compliant,No Exemption

Approvals / Certificates

General approvals

Approval	Standard	Certificate Name
CSA DEKRA Certification B.V.	C22.2	1536071
KEMA/KEUR DEKRA Certification B.V.	EN 60947	71-154769
UL Underwriters Laboratories Inc.	UL 1059	UL-US-L45172-6187116-11019891-1

Declarations of conformity and manufacturer's declarations

Approval	Standard	Certificate Name
EU-Declaration of Conformity WAGO GmbH & Co. KG	-	-
UK-Declaration of Conformity WAGO GmbH & Co. KG	-	-

 Continued on next page

Approvals for marine applications

Approval	Standard	Certificate Name
ABS American Bureau of Shipping	EN 60947	24-0152298-PDA
BV Bureau Veritas S.A.	EN 60947	07436/G0 BV
DNV GL Det Norske Veritas, Germanischer Lloyd	-	TAE00001V2

Downloads

Environmental Product Compliance

Compliance Search

Environmental Product Compliance 280-520

Documentation

Bid Text

280-520	19.02.2019	xml 3.40 KB	
280-520	28.02.2017	doc 24.50 KB	

CAD/CAE-Data

CAD data

2D/3D Models 280-520

CAE data

EPLAN Data Portal 280-520

WSCAD Universe 280-520

ZUKEN Portal 280-520

Continued on next page

1 Compatible Products

1.1 Required Accessories

1.1.1 End plate

1.1.1.1 End plate

Item No.: 280-342
End and intermediate plate; 2.5 mm thick; gray

Item No.: 280-343
End and intermediate plate; 2.5 mm thick; orange

Item No.: 280-369
Intermediate plate; 1.1 mm thick; orange

1.2 Optional Accessories

1.2.1 DIN-rail

1.2.1.1 Mounting accessories

Item No.: 210-196
Aluminum carrier rail; 35 x 8.2 mm; 1.6 mm thick; 2 m long; unslotted; similar to EN 60715; silver-colored

Item No.: 210-198
Copper carrier rail; 35 x 15 mm; 2.3 mm thick; 2 m long; unslotted; according to EN 60715; copper-colored

Item No.: 210-508
Steel carrier rail; 35 x 15 mm; 1.5 mm thick; 2 m long; slotted; galvanized; similar to EN 60715; silver-colored

Item No.: 210-197
Steel carrier rail; 35 x 15 mm; 1.5 mm thick; 2 m long; slotted; similar to EN 60715; silver-colored

Item No.: 210-506
Steel carrier rail; 35 x 15 mm; 1.5 mm thick; 2 m long; unslotted; galvanized; similar to EN 60715; silver-colored

Item No.: 210-114
Steel carrier rail; 35 x 15 mm; 1.5 mm thick; 2 m long; unslotted; similar to EN 60715; silver-colored

Item No.: 210-118
Steel carrier rail; 35 x 15 mm; 2.3 mm thick; 2 m long; unslotted; according to EN 60715; silver-colored

Item No.: 210-115
Steel carrier rail; 35 x 7.5 mm; 1 mm thick; 2 m long; slotted; according to EN 60715; "Hole width 18 mm; silver-colored

Item No.: 210-112
Steel carrier rail; 35 x 7.5 mm; 1 mm thick; 2 m long; slotted; according to EN 60715; "Hole width 25 mm; silver-colored

Item No.: 210-504
Steel carrier rail; 35 x 7.5 mm; 1 mm thick; 2 m long; slotted; galvanized; according to EN 60715; silver-colored

Item No.: 210-113
Steel carrier rail; 35 x 7.5 mm; 1 mm thick; 2 m long; unslotted; according to EN 60715; silver-colored

Item No.: 210-505
Steel carrier rail; 35 x 7.5 mm; 1 mm thick; 2 m long; unslotted; galvanized; according to EN 60715; silver-colored

1.2.2 Ferrule

1.2.2.1 Ferrule

Item No.: 216-301
Ferrule; Sleeve for 0.25 mm² / AWG 24; insulated; electro-tin plated; yellow

Item No.: 216-302
Ferrule; Sleeve for 0.34 mm² / 22 AWG; insulated; electro-tin plated; light turquoise

Item No.: 216-201
Ferrule; Sleeve for 0.5 mm² / 20 AWG; insulated; electro-tin plated; electrolytic copper; acc. to DIN 46228, Part 4/09.90; white

Item No.: 216-101
Ferrule; Sleeve for 0.5 mm² / AWG 22; uninsulated; electro-tin plated; silver-colored

Item No.: 216-202
Ferrule; Sleeve for 0.75 mm² / 18 AWG; insulated; electro-tin plated; gray

Item No.: 216-102
Ferrule; Sleeve for 0.75 mm² / 18 AWG; uninsulated; electro-tin plated; silver-colored

Item No.: 216-203
Ferrule; Sleeve for 1 mm² / AWG 18; insulated; electro-tin plated; red

Item No.: 216-103
Ferrule; Sleeve for 1 mm² / AWG 18; uninsulated; electro-tin plated

Item No.: 216-204
Ferrule; Sleeve for 1.5 mm² / AWG 16; insulated; electro-tin plated; black

Item No.: 216-104
Ferrule; Sleeve for 1.5 mm² / AWG 16; uninsulated; electro-tin plated; silver-colored

Continued on next page

1.2.3 Installation

1.2.3.1 Cover

Item No.: 709-154
Cover; Type 2; suitable for cover carrier, type 2; 1 m long; transparent

1.2.3.2 Cover carrier

Item No.: 709-168
Cover carrier; Type 2; incl. fixing/retaining screws and knurled nut; suitable for 283 to 285 Series rail-mounted terminal blocks; suitable for 279 to 281 Series double- and triple-deck terminal blocks; suitable for 780 to 785, 775, 776 and 777 Series TOPJOB® rail-mounted terminal blocks; suitable for 280 Series sensor and actuator terminal blocks; suitable for 282 Series disconnect/ test terminal blocks for transformer circuits; gray

1.2.3.3 Mounting accessories

Item No.: 209-106
Mounting carrier; for isolated mounting on DIN 35 rails; gray

Item No.: 249-116
Screwless end stop; 6 mm wide; for DIN-rail 35 x 15 and 35 x 7.5; gray

1.2.4 Insulation stop

1.2.4.1 Insulation stop

Item No.: 280-470
Insulation stop; 0.08 - 0.2 mm² "s" (0.14 mm² "f-st"); 5 pieces/strip; white

Item No.: 280-471
Insulation stop; 0.25 - 0.5 mm²; 5 pieces/ strip; light gray

Item No.: 280-472
Insulation stop; 0.75 - 1 mm²; 5 pieces/strip; black

1.2.5 Jumper

1.2.5.1 Jumper

Item No.: 280-490
Jumper; 10-way; insulated; gray

Item No.: 280-482
Jumper; 2-way; insulated; gray

Item No.: 280-492
Jumper; 2-way; insulated; gray

Item No.: 280-483
Jumper; 3-way; insulated; gray

Item No.: 280-484
Jumper; 4-way; insulated; gray

Item No.: 280-485
Jumper; 5-way; insulated; gray

Item No.: 280-402
Jumper; insulated; gray

Item No.: 280-409
Jumper; insulated; gray

Item No.: 780-452
Staggered jumper; from 1 to 2; insulated; gray

Item No.: 780-453
Staggered jumper; from 1 to 3; insulated; gray

Item No.: 780-454
Staggered jumper; from 1 to 4; insulated; gray

Item No.: 780-455
Staggered jumper; from 1 to 5; insulated; gray

 Continued on next page

1.2.5.1 Jumper

Item No.: 780-456
Staggered jumper; from 1 to 6; insulated; gray

Item No.: 780-457
Staggered jumper; from 1 to 7; insulated; gray

Item No.: 780-458
Staggered jumper; from 1 to 8; insulated; gray

Item No.: 281-421
Vertical jumper; insulated; gray

Item No.: 210-103
Wire commoning chain; 0.5 mm²; insulated; black

Item No.: 709-110
Wire commoning chain; 2.5 mm²; insulated; black

Item No.: 709-111
Wire commoning chain; 2.5 mm²; insulated; black

Item No.: 709-112
Wire commoning chain; 2.5 mm²; insulated; black

Item No.: 210-123
Wire commoning chain; insulated; blue

1.2.6 Marking

1.2.6.1 Marker

Item No.: 793-5501
WMB marking card; as card; for terminal block width 5 - 17.5 mm; stretchable 5 - 5.2 mm; plain; snap-on type; white

Item No.: 793-501
WMB marking card; as card; not stretchable; plain; snap-on type; white

Item No.: 2009-115
WMB-Inline; for Smart Printer; 1500 pieces on roll; stretchable 5 - 5.2 mm; plain; snap-on type; white

1.2.7 Protective warning marker

1.2.7.1 Cover

Item No.: 280-415
Protective warning marker; for 5 terminal blocks; with high-voltage symbol, black; yellow

1.2.8 Push-in type wire jumper

1.2.8.1 Jumper

Item No.: 249-126
Push-in type wire jumper; 0.75 mm²; insulated; 110 mm long; black

Item No.: 249-123
Push-in type wire jumper; 0.75 mm²; insulated; 180 mm long; black

Item No.: 249-127
Push-in type wire jumper; 0.75 mm²; insulated; 250 mm long; black

Item No.: 249-125
Push-in type wire jumper; insulated; 60 mm long; black

Continued on next page

1.2.9 Test and measurement

1.2.9.1 Testing accessories

Item No.: 249-142
L-type end module; modular; with rigid contact pin; End module; 1,50 mm²; gray

Item No.: 249-141
L-type test plug module; modular; with spring-loaded contact pin; Center module; 1,50 mm²; gray

1.2.10 Tool

1.2.10.1 Operating tool

Item No.: 210-658
Operating tool; Blade: 3.5 x 0.5 mm; with a partially insulated shaft; angled; short; multicoloured

Item No.: 210-720
Operating tool; Blade: 3.5 x 0.5 mm; with a partially insulated shaft; multicoloured

Item No.: 210-657
Operating tool; Blade: 3.5 x 0.5 mm; with a partially insulated shaft; short; multicoloured

Installation Notes

Installation

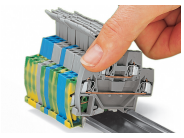

Snapping a terminal block onto the DIN-rail.

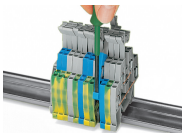

Removing a terminal block from the assembly.

Double-deck terminal blocks accommodate two circuits of different potentials on two decks; different circuits can be differentiated by color coding either deck (280 Series). The lower deck is wider than the upper for easier wiring.

Conductor termination

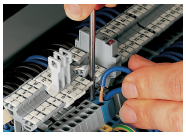

The flexible marker carrier, which is placed above the wiring level, can be pushed aside during wiring or commoning. The carrier has two staggered levels for WMB markers that perfectly align with the terminal block decks.

 Continued on next page

Commoning

Commoning using an adjacent jumper.
Push jumpers down until fully inserted!

Commoning

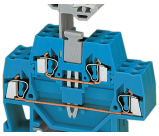

Commoning with a vertical jumper (281-421).
Push vertical jumper down until fully inserted!

Combining vertical and adjacent jumpers.

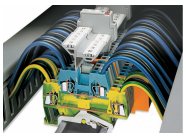

Example of a mixed assembly with double-deck terminal blocks.
The 280 Series Double-Deck Terminal Blocks are available with decks of same or different color according to their function. This is an additional visual aid during wiring, service or maintenance.

With a terminal block width of just 5 mm, an effective width of just 2.5 mm for terminal blocks of same or different potentials can be realized for conductors ranging 0.08 mm² ... 2.5 mm² (28 ... 14 AWG).

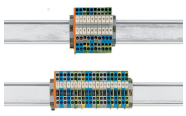

Use 50% less rail space with double-deck terminal blocks.

Marking

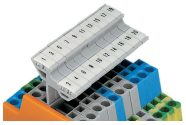

Labeling via WMB Multi Marking System.

 Continued on next page