Data Sheet | Item Number: 2585-528

Relay module; Nominal input voltage: 230 VAC; 2 changeover contacts; Limiting continuous current: 6 A; with manual operation; Set of relay socket and elementary relay; Yellow status indicator; Module width: 27 mm

https://www.wago.com/2585-528

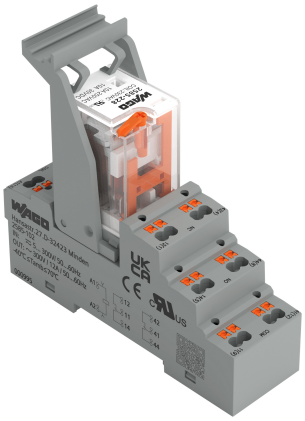

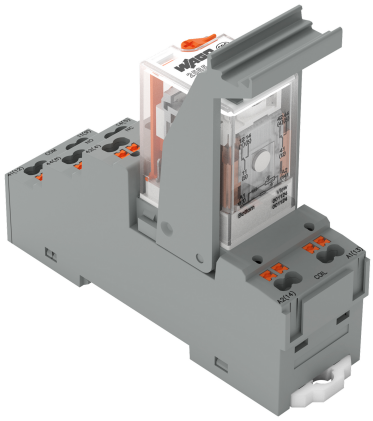

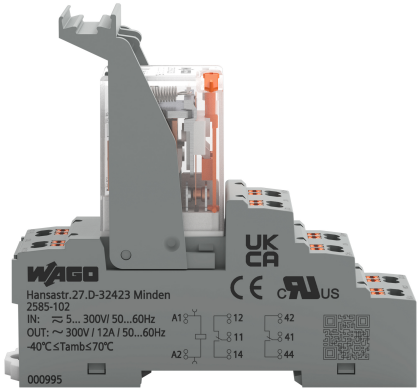

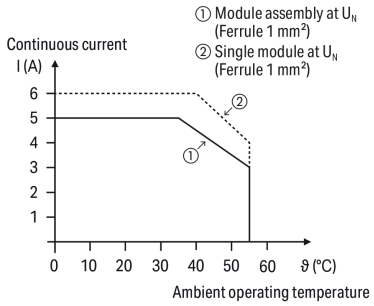

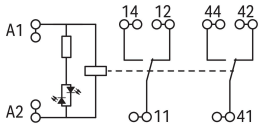

Deratingkurve

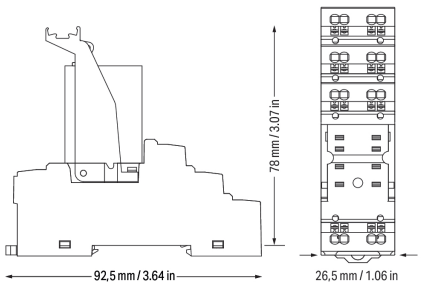

This item includes:

Item No.: 858-110	1	Item No.: 2585-102	1	Item No.: 2585-228	1
Ejector; for basic relays 25 mm x 35 mm		Relay socket; 2 changeover contacts		Basic relay; Nominal input voltage: 230 VAC; 2 changeover contacts; Limiting continuous current: 10 A; with manual operation; Module width: 21 mm; Module height: 35mm	

Technical data

Control circuit

Nominal input voltage U_N	230 VAC
Input voltage range	-20 ... +10 %
Nominal input current at U_N	7.5 mA

Load circuit

Number of changeover/switchover contacts	2
Contact material (relay)	$AgSnO_2$
Limiting continuous current	6 A
Switching Voltage, Max.	250 VAC; 30 VDC
Switching power (resistive) max.	AC 1500 VA; DC 180 W
Utilization category	AC-15: 3 A / 250 VAC DC-13: 2 A / 30 VDC
Recommended minimum load	5 V / 100 mA
Pull-in time (typ.)	25 ms
Drop-out time (typ.)	25 ms
Electrical life (NO; resistive load; 23 °C)	100 x 10^3 switching operations
Mechanical life	10 x 10^6 switching operations

Signaling

Status indicator	Yellow LED Mechanical

Safety and protection

Rated Voltage	300 V
Rated impulse withstand voltage	2.5 kV
Overvoltage category	II
Pollution degree	2
Dielectric strength (control/load circuit) (AC, 1 min)	2.5 kVrms
Dielectric strength (open contact) (AC, 1 min)	1.5 kVrms
Dielectric strength (load/load circuit) (AC, 1 min)	2.5 kVrms
Insulation type (open contact)	Functional insulation
Insulation type (load/load circuit)	Basic insulation
Insulation type (adjacent devices)	Reinforced insulation (safe isolation)
Protection type	IP20

 Continued on next page

Connection Data

Connection technology	Push-in
Solid conductor	0.25 … 2.5 mm² / 22 … 14 AWG
Fine-stranded conductor	0.25 … 2.5 mm² / 22 … 14 AWG
Strip length	10 … 11 mm / 0.39 … 0.43 inches
Note (conductor cross-section)	2 x 0.34 … 2 x 1.5 mm² / 1 x 2.5 mm² / 2 x 22 … 2 x 16 AWG

Physical data

Width	26.8 mm / 1.06 inches
Height	92.5 mm / 3.64 inches
Depth from upper-edge of DIN-rail	78 mm / 3.07 inches

Mechanical data

Mounting type	DIN-35 rail
Mounting position	horizontal (standing/lying); vertical

Material data

Note (material data)	Information on material specifications can be found here
Weight	95.7 g

Environmental requirements

Ambient temperature (operation at U_N)	-40 … +55 °C
Ambient temperature (storage)	-40 … +70 °C
Processing temperature	-25 … +50 °C
Temperature range of connection cable	≥ ($T_{ambient}$ + 25 K)
Relative humidity	20 … 80 % (no condensation permissible)
Operating altitude (max.)	2000 m

Standards and Specifications

Standards/specifications	EN 60947-5-1

Basic relay

WAGO Basic Relay	2585-228

Commercial data

PU (SPU)	10 pcs
Packaging type	Box
Country of origin	CN
GTIN	4066966667165
Customs tariff number	85364900990

 Continued on next page

Product Classification

UNSPSC	39122334
ETIM 9.0	EC001437
ETIM 10.0	EC001437
ECCN	NO US CLASSIFICATION

Environmental Product Compliance

RoHS Compliance Status	Compliant,No Exemption

Approvals / Certificates

Declarations of conformity and manufacturer's declarations

Approval	Standard	Certificate Name
EU-Declaration of Conformity WAGO GmbH & Co. KG	-	-
UK-Declaration of Conformity WAGO GmbH & Co. KG	-	-

Downloads

Environmental Product Compliance

Compliance Search

Environmental Product Compliance 2585-528

Documentation

Instruction Leaflet

WAGO Relaismodul	V 1.0.0 12.05.2025	pdf 800.51 KB	

CAD/CAE-Data

CAD data

2D/3D Models 2585-528

Continued on next page

1 Compatible Products

1.1 Optional Accessories

1.1.1 Basic relay

1.1.1.1 Basic relay

Item No.: 2585-228
Basic relay; Nominal input voltage: 230 VAC; 2 changeover contacts; Limiting continuous current: 10 A; with manual operation; Module width: 21 mm; Module height: 35mm

1.1.2 Ferrule

1.1.2.1 Ferrule

Item No.: 216-241
Ferrule; Sleeve for 0.5 mm² / 20 AWG; insulated; electro-tin plated; electrolytic copper; gastight crimped; acc. to DIN 46228, Part 4/09.90; white

Item No.: 216-242
Ferrule; Sleeve for 0.75 mm² / 18 AWG; insulated; electro-tin plated; electrolytic copper; gastight crimped; acc. to DIN 46228, Part 4/09.90; gray

Item No.: 216-243
Ferrule; Sleeve for 1 mm² / AWG 18; insulated; electro-tin plated; electrolytic copper; gastight crimped; acc. to DIN 46228, Part 4/09.90; red

Item No.: 216-244
Ferrule; Sleeve for 1.5 mm² / AWG 16; insulated; electro-tin plated; electrolytic copper; gastight crimped; acc. to DIN 46228, Part 4/09.90; black

1.1.3 Jumper

1.1.3.1 Jumper

Item No.: 2585-902
Jumper; 2-way; insulated

1.1.4 Marking

1.1.4.1 Marker

Item No.: 793-5501
WMB marking card; as card; for terminal block width 5 - 17.5 mm; stretchable 5 - 5.2 mm; plain; snap-on type; white

Item No.: 793-501
WMB marking card; as card; not stretchable; plain; snap-on type; white

Item No.: 2009-115
WMB-Inline; for Smart Printer; 1500 pieces on roll; stretchable 5 - 5.2 mm; plain; snap-on type; white

1.1.4.2 Marking strip

Item No.: 2009-110
Marking strips; for Smart Printer; 50 m on roll; not stretchable; plain; snap-on type; white

 Continued on next page

1.1.5 Tool

1.1.5.1 Operating tool

Item No.: 210-719
Operating tool; Blade: 2.5 x 0.4 mm; with a partially insulated shaft