# Data Sheet | Item Number: 232-664

Strain relief housing; for female and male connectors; 2 parts; Pin spacing 7.5 mm; 4-pole; gray

https://www.wago.com/232-664

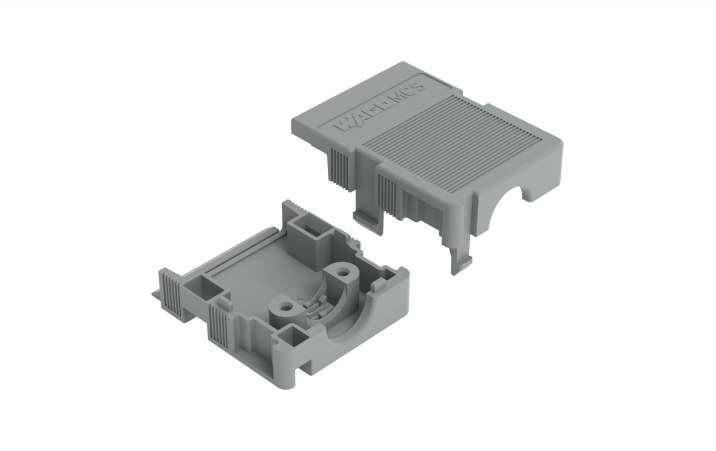

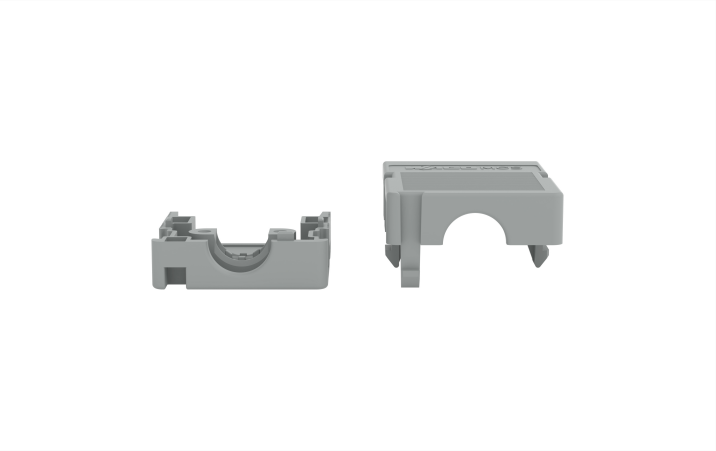

Color: gray

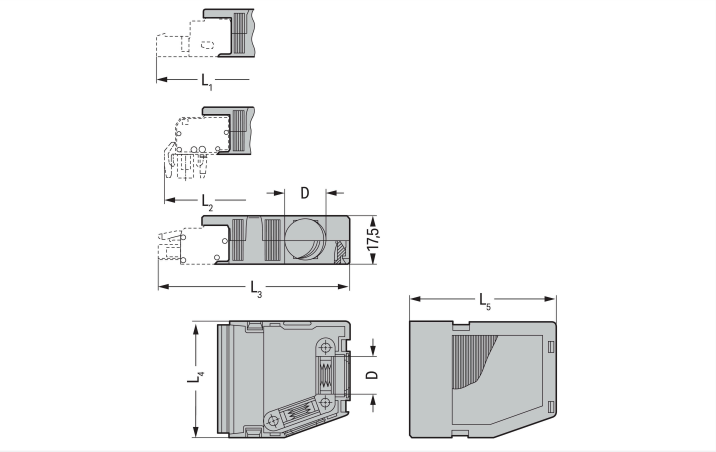


Dimensions in mm
2-pole; only suitable for cable ties; 1 cable outlet (rear side), max. cable tie width 3.6 mm;3- to 4-pole; suitable for cable clamp; 1 x cable outlet (rear side);5-pole; suitable for cable clamp; 1 x cable outlet (rear side) and 1 x cable outlets (side); 1 cover (included)7-pole; suitable for cable clamp; 1 x cable outlet (rear side) and 2 x cable outlets (side); 2 covers (included)Cable ties and binding tools are not offered by WAGO.

- Suitable for cable clamp
- 1 x cable outlet, rear

## Connection Data

### Connection 1

| | |
|---|---|
| Pole number | 4 |

## Physical data

| | |
|---|---|
| Pin spacing | 7.5 mm / 0.295 inches |
| Width | 30.5 mm / 1.201 inches |
| Height | 17.5 mm / 0.689 inches |
| Depth | 33 mm / 1.299 inches |

## Mechanical data

| | |
|---|---|
| Suitable | for standard male and female connectors |

## Material data

| | |
|---|---|
| Note (material data) | Information on material specifications can be found here |
| Color | gray |
| Material group | I |
| Insulation material (main housing) | Polyamide (PA66) |
| Flammability class per UL94 | V0 |
| Fire load | 0.243 MJ |
| Weight | 7.1 g |

## Commercial data

| | |
|---|---|
| Product Group | 3 (Multi Conn. System) |
| PU (SPU) | 25 pcs |
| Packaging type | Box |
| Country of origin | DE |
| GTIN | 4017332371827 |
| Customs tariff number | 39269097900 |

## Product Classification

| | |
|---|---|
| UNSPSC | 39121421 |
| eCl@ss 10.0 | 27-14-11-92 |
| eCl@ss 9.0 | 27-44-04-92 |
| ETIM 9.0 | EC002848 |
| ETIM 10.0 | EC002848 |
| ECCN | NO US CLASSIFICATION |

## Environmental Product Compliance

| | |
|---|---|
| RoHS Compliance Status | Compliant,No Exemption |

## Approvals / Certificates

### Approvals for marine applications

| Approval | Standard | Certificate Name |
|---|---|---|
| ABS<br>American Bureau of Shipping | - | 24-0095975-PDA |

 Continued on next page

## Downloads

### Environmental Product Compliance

**Compliance Search**

Environmental Product Compliance 232-664

### Documentation

**Additional Information**

| | | | |
|---|---|---|---|
| Technical Section | 03.04.2019 | pdf<br>2027.26 KB | |

### CAD/CAE-Data

**CAE data**

EPLAN Data Portal 232-664

## 1 Compatible Products

### 1.1 Optional Accessories

#### 1.1.1 Installation

##### 1.1.1.1 Mounting accessories

Item No.: 209-177
Cable clamp; for strain relief; 4- to 6-pole

Item No.: 209-176
Fixing screws; for cable clamp; 4- to 6-pole

#### 1.1.2 Marking

##### 1.1.2.1 Marker

Item No.: 793-5501/000-006
WMB marking card; as card; for terminal block width 5 - 17.5 mm; stretchable 5 - 5.2 mm; plain; snap-on type; blue

Item No.: 793-5501/000-014
WMB marking card; as card; for terminal block width 5 - 17.5 mm; stretchable 5 - 5.2 mm; plain; snap-on type; brown

Item No.: 793-5501/000-007
WMB marking card; as card; for terminal block width 5 - 17.5 mm; stretchable 5 - 5.2 mm; plain; snap-on type; gray

Item No.: 793-5501/000-023
WMB marking card; as card; for terminal block width 5 - 17.5 mm; stretchable 5 - 5.2 mm; plain; snap-on type; green

Item No.: 793-5501/000-017
WMB marking card; as card; for terminal block width 5 - 17.5 mm; stretchable 5 - 5.2 mm; plain; snap-on type; light green

Item No.: 793-5501/000-012
WMB marking card; as card; for terminal block width 5 - 17.5 mm; stretchable 5 - 5.2 mm; plain; snap-on type; orange

Item No.: 793-5501/000-005
WMB marking card; as card; for terminal block width 5 - 17.5 mm; stretchable 5 - 5.2 mm; plain; snap-on type; red

Item No.: 793-5501/000-024
WMB marking card; as card; for terminal block width 5 - 17.5 mm; stretchable 5 - 5.2 mm; plain; snap-on type; violet

Item No.: 793-5501
WMB marking card; as card; for terminal block width 5 - 17.5 mm; stretchable 5 - 5.2 mm; plain; snap-on type; white

Item No.: 793-5501/000-002
WMB marking card; as card; for terminal block width 5 - 17.5 mm; stretchable 5 - 5.2 mm; plain; snap-on type; yellow

Item No.: 793-501/000-006
WMB marking card; as card; not stretchable; plain; snap-on type; blue

Item No.: 793-501/000-007
WMB marking card; as card; not stretchable; plain; snap-on type; gray


Continued on next page

### 1.1.2.1 Marker

Item No.: 793-501/000-023
WMB marking card; as card; not stretchable; plain; snap-on type; green

Item No.: 793-501/000-017
WMB marking card; as card; not stretchable; plain; snap-on type; light green

Item No.: 793-501/000-012
WMB marking card; as card; not stretchable; plain; snap-on type; orange

Item No.: 793-501/000-005
WMB marking card; as card; not stretchable; plain; snap-on type; red

Item No.: 793-501/000-024
WMB marking card; as card; not stretchable; plain; snap-on type; violet



Item No.: 793-501
WMB marking card; as card; not stretchable; plain; snap-on type; white

Item No.: 793-501/000-002
WMB marking card; as card; not stretchable; plain; snap-on type; yellow

Item No.: 2009-115/000-006
WMB-Inline; for Smart Printer; 1500 pieces on roll; stretchable 5 - 5.2 mm; plain; snap-on type; blue

Item No.: 2009-115/000-007
WMB-Inline; for Smart Printer; 1500 pieces on roll; stretchable 5 - 5.2 mm; plain; snap-on type; gray

Item No.: 2009-115/000-023
WMB-Inline; for Smart Printer; 1500 pieces on roll; stretchable 5 - 5.2 mm; plain; snap-on type; green

Item No.: 2009-115/000-017
WMB-Inline; for Smart Printer; 1500 pieces on roll; stretchable 5 - 5.2 mm; plain; snap-on type; light green

Item No.: 2009-115/000-012
WMB-Inline; for Smart Printer; 1500 pieces on roll; stretchable 5 - 5.2 mm; plain; snap-on type; orange

Item No.: 2009-115/000-024
WMB-Inline; for Smart Printer; 1500 pieces on roll; stretchable 5 - 5.2 mm; plain; snap-on type; violet

Item No.: 2009-115
WMB-Inline; for Smart Printer; 1500 pieces on roll; stretchable 5 - 5.2 mm; plain; snap-on type; white

Item No.: 2009-115/000-002
WMB-Inline; for Smart Printer; 1500 pieces on roll; stretchable 5 - 5.2 mm; plain; snap-on type; yellow

## Installation Notes

### Application

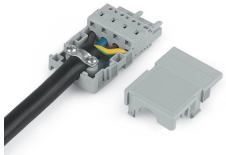

2- to 3-pole; only suitable for cable ties; max. 3.6 mm cable tie width
4- to 16-pole; suitable for cable clamp, covers (included)
Cable ties and binding tools are not offered by WAGO.

### Installation

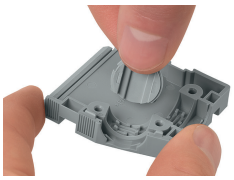

Snapping a cover into the unused cable outlet.

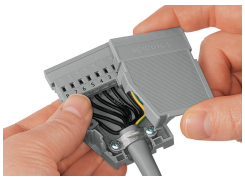

Strain relief housing shown with a male connector equipped with CAGE CLAMP®

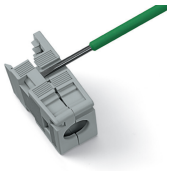

Disassembling a strain relief housing is only possible using an operating tool (e.g., 210-719).