Data Sheet | Item Number: 232-610

Strain relief housing; for female and male connectors; 2 parts; Pin spacing 5 mm; 10-pole; gray

https://www.wago.com/232-610

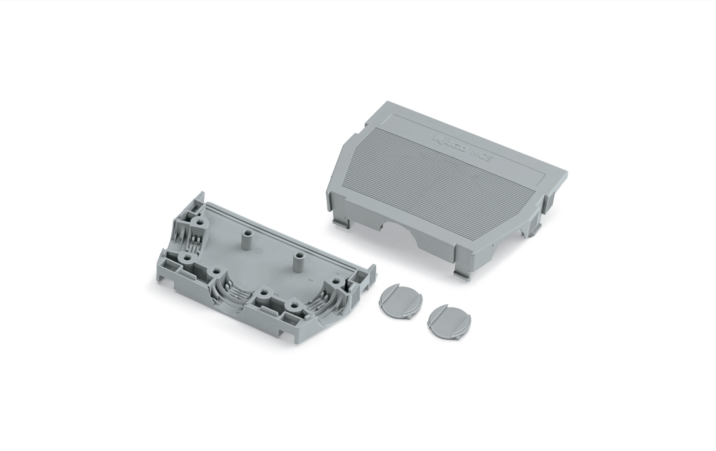

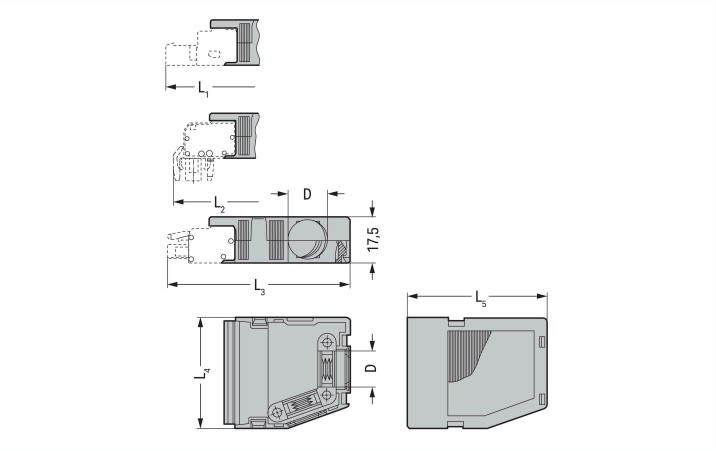

Color: gray

Similar to illustration

Dimensions in mm
2- to 3-pole; only suitable for cable ties; 1 cable outlet (rear side); max. 3.6 mm cable tie width4- to 6-pole; suitable for cable clamp; 1 x cable outlet (rear side)7- to 8-pole; suitable for cable clamp; 1 x cable outlet (rear side) and 1 x cable outlet (side); 1 cover (included)9- to 16-pole; suitable for cable clamp; 1 x cable outlet (rear side) and 2 x cable outlets (side); 2 covers (included)Cable ties and binding tools are not offered by WAGO.

- Suitable for cable clamp
- 1 x cable outlet (rear side)
- 2 x cable outlet (side)
- 2 covers included

Connection Data

Connection 1

Pole number	10

Physical data

Pin spacing	5 mm / 0.197 inches
Width	53 mm / 2.087 inches
Height	17.5 mm / 0.689 inches
Depth	54 mm / 2.126 inches

Mechanical data

Suitable	for standard male and female connectors

Continued on next page

Material data

Note (material data)	Information on material specifications can be found here
Color	gray
Material group	I
Insulation material (main housing)	Polyamide (PA66)
Flammability class per UL94	V0
Fire load	0.374 MJ
Weight	13.8 g

Commercial data

Product Group	3 (Multi Conn. System)
PU (SPU)	25 pcs
Packaging type	Box
Country of origin	DE
GTIN	4017332201971
Customs tariff number	39269097900

Product Classification

UNSPSC	39121421
eCl@ss 10.0	27-14-11-92
eCl@ss 9.0	27-44-04-92
ETIM 9.0	EC002848
ETIM 10.0	EC002848
ECCN	NO US CLASSIFICATION

Environmental Product Compliance

RoHS Compliance Status	Compliant,No Exemption

Approvals / Certificates

General approvals

Approval	Standard	Certificate Name
CSA DEKRA Certification B.V.	C22.2	1466354
KEMA/KEUR DEKRA Certification B.V.	EN 61984	71-130478 REV.1
UL Underwriters Laboratories Inc.	UL 1059	E45172
UR Underwriters Laboratories Inc.	UL 1977	E45171

Approvals for marine applications

Approval	Standard	Certificate Name
ABS American Bureau of Shipping	-	24-0095975-PDA

 Continued on next page

Downloads

Environmental Product Compliance

Compliance Search

Environmental Product Compliance 232-610

Documentation

Additional Information

Technical Section	03.04.2019	pdf 2027.26 KB	

CAD/CAE-Data

CAD data

2D/3D Models 232-610

CAE data

EPLAN Data Portal 232-610

ZUKEN Portal 232-610

1 Compatible Products

1.1 Optional Accessories

1.1.1 Installation

1.1.1.1 Mounting accessories

Item No.: 209-173
Fixing screw; for cable clamp; 7 or more poles

1.1.2 Marking

1.1.2.1 Marker

Item No.: 793-5501/000-006
WMB marking card; as card; for terminal block width 5 - 17.5 mm; stretchable 5 - 5.2 mm; plain; snap-on type; blue

Item No.: 793-5501/000-014
WMB marking card; as card; for terminal block width 5 - 17.5 mm; stretchable 5 - 5.2 mm; plain; snap-on type; brown

Item No.: 793-5501/000-007
WMB marking card; as card; for terminal block width 5 - 17.5 mm; stretchable 5 - 5.2 mm; plain; snap-on type; gray

Item No.: 793-5501/000-023
WMB marking card; as card; for terminal block width 5 - 17.5 mm; stretchable 5 - 5.2 mm; plain; snap-on type; green

Item No.: 793-5501/000-017
WMB marking card; as card; for terminal block width 5 - 17.5 mm; stretchable 5 - 5.2 mm; plain; snap-on type; light green

Item No.: 793-5501/000-012
WMB marking card; as card; for terminal block width 5 - 17.5 mm; stretchable 5 - 5.2 mm; plain; snap-on type; orange

Item No.: 793-5501/000-005
WMB marking card; as card; for terminal block width 5 - 17.5 mm; stretchable 5 - 5.2 mm; plain; snap-on type; red

Item No.: 793-5501/000-024
WMB marking card; as card; for terminal block width 5 - 17.5 mm; stretchable 5 - 5.2 mm; plain; snap-on type; violet

Item No.: 793-5501
WMB marking card; as card; for terminal block width 5 - 17.5 mm; stretchable 5 - 5.2 mm; plain; snap-on type; white

Item No.: 793-5501/000-002
WMB marking card; as card; for terminal block width 5 - 17.5 mm; stretchable 5 - 5.2 mm; plain; snap-on type; yellow

Item No.: 793-501/000-006
WMB marking card; as card; not stretchable; plain; snap-on type; blue

Item No.: 793-501/000-007
WMB marking card; as card; not stretchable; plain; snap-on type; gray

 Continued on next page

1.1.2.1 Marker

Item No.: 793-501/000-023
WMB marking card; as card; not stretchable; plain; snap-on type; green

Item No.: 793-501/000-017
WMB marking card; as card; not stretchable; plain; snap-on type; light green

Item No.: 793-501/000-012
WMB marking card; as card; not stretchable; plain; snap-on type; orange

Item No.: 793-501/000-005
WMB marking card; as card; not stretchable; plain; snap-on type; red

Item No.: 793-501/000-024
WMB marking card; as card; not stretchable; plain; snap-on type; violet

Item No.: 793-501
WMB marking card; as card; not stretchable; plain; snap-on type; white

Item No.: 793-501/000-002
WMB marking card; as card; not stretchable; plain; snap-on type; yellow

Item No.: 2009-115/000-006
WMB-Inline; for Smart Printer; 1500 pieces on roll; stretchable 5 - 5.2 mm; plain; snap-on type; blue

Item No.: 2009-115/000-007
WMB-Inline; for Smart Printer; 1500 pieces on roll; stretchable 5 - 5.2 mm; plain; snap-on type; gray

Item No.: 2009-115/000-023
WMB-Inline; for Smart Printer; 1500 pieces on roll; stretchable 5 - 5.2 mm; plain; snap-on type; green

Item No.: 2009-115/000-017
WMB-Inline; for Smart Printer; 1500 pieces on roll; stretchable 5 - 5.2 mm; plain; snap-on type; light green

Item No.: 2009-115/000-012
WMB-Inline; for Smart Printer; 1500 pieces on roll; stretchable 5 - 5.2 mm; plain; snap-on type; orange

Item No.: 2009-115/000-024
WMB-Inline; for Smart Printer; 1500 pieces on roll; stretchable 5 - 5.2 mm; plain; snap-on type; violet

Item No.: 2009-115
WMB-Inline; for Smart Printer; 1500 pieces on roll; stretchable 5 - 5.2 mm; plain; snap-on type; white

Item No.: 2009-115/000-002
WMB-Inline; for Smart Printer; 1500 pieces on roll; stretchable 5 - 5.2 mm; plain; snap-on type; yellow

1.1.3 Strain relief

1.1.3.1 Mounting accessories

Item No.: 209-174
Cable clamp; for strain relief; 7 or more poles

Installation Notes

Application

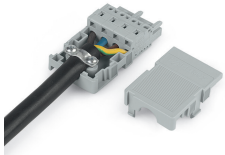

2- to 3-pole; only suitable for cable ties; max. 3.6 mm cable tie width
4- to 16-pole; suitable for cable clamp, covers (included)
Cable ties and binding tools are not offered by WAGO.

Installation

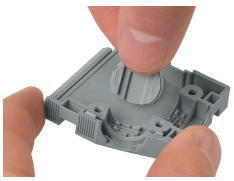

Snapping a cover into the unused cable outlet.

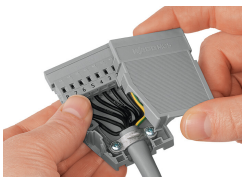

Strain relief housing shown with a male connector equipped with CAGE CLAMP®

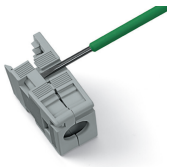

Disassembling a strain relief housing is only possible using an operating tool (e.g., 210-719).

Continued on next page