Data Sheet | Item Number: 231-102/031-000

1-conductor female connector; CAGE CLAMP®; 2.5 mm²; Pin spacing 5 mm; 2-pole; clamping collar; gray

https://www.wago.com/231-102/031-000

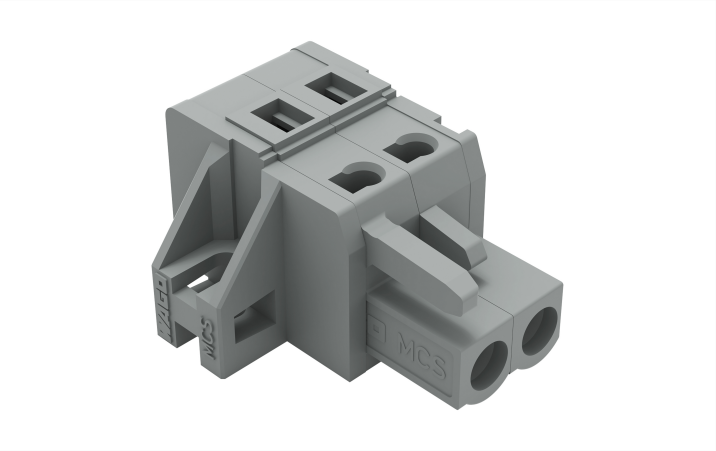

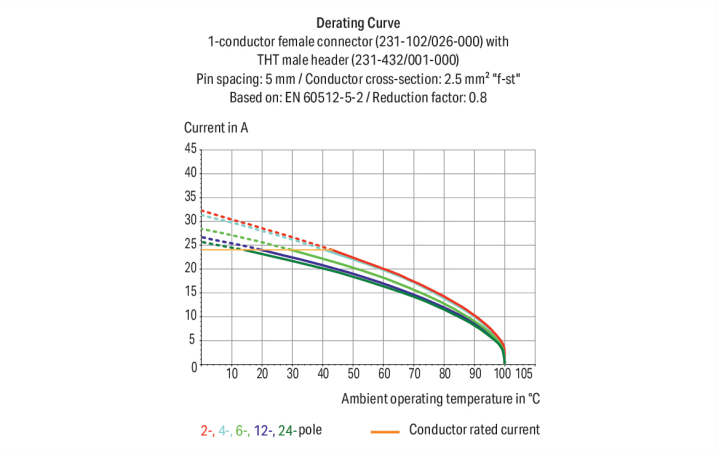

Color: gray

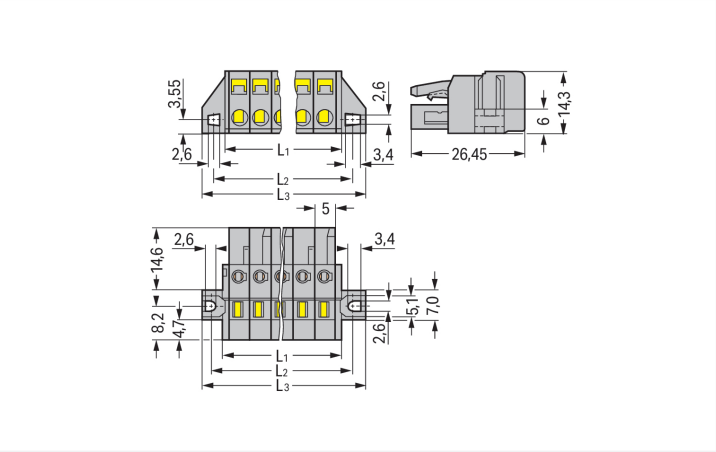

Dimensions in mm
L1 = (pole no. x pin spacing) + 3 mmL2 = (pole no. x pin spacing) + 8.8 mmL3 = (pole no. x pin spacing) + 14.8 mm2- to 3-pole female connectors – one latch only

Female connector, 231 Series, with 5 mm pin spacing

This female connector (item number 231-102/031-000) provides fault-free electrical installations. Strip lengths must be between 8 and 9 mm when connecting conductors to this female connector. Featuring one conductor terminal along with CAGE CLAMP®, this product delivers reliable performance. Our CAGE CLAMP® connection provides a safe and maintenance-free way to connect all types of conductors. You do not need to prepare the conductor in any way, such as by crimping ferrules. The item's dimensions are (24.8 x 14.3 x 26.45) mm (width x height x depth). This female connector is suitable for conductor cross-sections ranging from 0.08 mm² to 2.5 mm².

The contact surface is coated with tin.

- Actuation via operating tool
- Designed for enclosure feedthrough
- Easy simplified wiring
- Safe and fast installation
- Compact sizes

Notes

Safety Information	The *MCS – MULTI CONNECTION SYSTEM* includes connectors without breaking capacity in accordance with DIN EN 61984. When used as intended, these connectors must not be connected/disconnected when live or under load.When used as intended, these connectors must not be connected/disconnected when live or under load. The circuit design should ensure header pins, which can be touched, are not live when unmated.
Variants:	Gold-plated or partially gold-plated contact surfaces Other versions (or variants) can be requested from WAGO Sales or configured at https://configurator.wago.com/.

Electrical data

Ratings per	IEC/EN 60664-1		
Overvoltage category	III	III	II
Pollution degree	3	2	2
Nominal voltage	320 V	320 V	630 V
Rated impulse withstand voltage	4 kV	4 kV	4 kV
Rated current	16 A	16 A	16 A

Approvals per	UL 1059		
Use group	B	C	D
Rated voltage	300 V	-	300 V
Rated current	15 A	-	10 A

Approvals per	UL 1977
Rated voltage	600 V
Rated current	15 A

Approvals per	CSA		
Use group	B	C	D
Rated voltage	300 V	-	300 V
Rated current	15 A	-	10 A

Connection Data

Clamping units	2
Total number of potentials	2
Number of connection types	1
Number of levels	1

Connection 1

Connection technology	CAGE CLAMP®
Actuation type	Operating tool
Actuation direction 1	Operation parallel to conductor entry
Actuation direction 2	Operation perpendicular to conductor entry
Solid conductor	0.08 … 2.5 mm² / 28 … 12 AWG
Fine-stranded conductor	0.08 … 2.5 mm² / 28 … 12 AWG
Fine-stranded conductor; with insulated ferrule	0.25 … 1.5 mm²
Fine-stranded conductor; with uninsulated ferrule	0.25 … 2.5 mm²
Strip length	8 … 9 mm / 0.31 … 0.35 inches
Pole number	2
Conductor entry direction to mating direction	0 °

Physical data

Pin spacing	5 mm / 0.197 inches
Width	24.8 mm / 0.976 inches
Height	14.3 mm / 0.563 inches
Depth	26.45 mm / 1.041 inches

 Continued on next page

Mechanical data

Variable coding	Yes
Mounting type	Mounting flange
Mounting type	Feed-through mounting Panel mounting
Anti-rotation protection	Yes
Suitable for through-panel applications	Yes

Plug-in connection

Contact type (pluggable connector)	Female connector/socket
Connector (connection type)	for conductor
Mismating protection	No

Material data

Note (material data)	Information on material specifications can be found here
Color	gray
Material group	I
Insulation material (main housing)	Polyamide (PA66)
Flammability class per UL94	V0
Clamping spring material	Chrome-nickel spring steel (CrNi)
Contact material	Copper alloy
Contact Plating	Tin
Fire load	0.07 MJ
Weight	4.5 g

Environmental requirements

Limit temperature range	-60 … +100 °C
Processing temperature	-35 … +60 °C

Environmental Testing

Test specification: Railway applications – Rolling stock – Electronic equipment	DIN EN 50155 (VDE 0115-200):2022-06
Test procedure: Railway applications – Rolling stock equipment – Vibration and shock tests	DIN EN 61373 (VDE 0115-0106):2011-04
Spectrum/Mounting location	Service life test, Category 1, Class A/B
Functional test with noise-like oscillations	Test passed according to Section 8 of the standard
Frequency	f_1 = 5 Hz to f_2 = 150 Hz
Acceleration	0.101g (highest test level used for all axes)
Test duration per axis	10 min.
Test directions	X, Y and Z axes
Monitoring of contact faults and interruptions	Passed
Voltage drop measurement before and after each axis	Passed
Simulated service life test through increased levels of noise-like oscillations	Test passed according to Section 9 of the standard
Frequency	f_1 = 5 Hz to f_2 = 150 Hz
Acceleration	0.572g (highest test level used for all axes)
Test duration per axis	5 h
Test directions	X, Y and Z axes
Extended testing: Monitoring of contact faults and interruptions	Passed
Extended testing: Voltage drop measurement before and after each axis	Passed

 Continued on next page

Environmental Testing

Shock test	Test passed according to Section 10 of the standard
Shock pulse form	Half sine
Acceleration	5g (highest test level used for all axes)
Shock duration	30 ms
Number of shocks (per axis)	3 pos. und 3 neg.
Test directions	X, Y and Z axes
Extended testing: Monitoring of contact faults and interruptions	Passed
Extended testing: Voltage drop measurement before and after each axis	Passed
Vibration and shock stress for rolling stock equipment	Passed

Commercial data

Product Group	3 (Multi Conn. System)
PU (SPU)	100 pcs
Packaging type	Box
Country of origin	DE
GTIN	4044918337410
Customs tariff number	85366990990

Product Classification

UNSPSC	39121409
eCl@ss 10.0	27-44-03-09
eCl@ss 9.0	27-44-03-09
ETIM 9.0	EC002638
ETIM 10.0	EC002638
ECCN	NO US CLASSIFICATION

Environmental Product Compliance

RoHS Compliance Status	Compliant,No Exemption

Approvals / Certificates

General approvals

Approval	Standard	Certificate Name
CB DEKRA Certification B.V.	IEC 61984	NL-113351
CSA DEKRA Certification B.V.	C22.2	LR 18677-25
KEMA/KEUR DEKRA Certification B.V.	EN 61984	71-130478 REV.1
UL Underwriters Laboratories Inc.	UL 1059	E45172
UR Underwriters Laboratories Inc.	UL 1977	E45171

Declarations of conformity and manufacturer's declarations

Approval	Standard	Certificate Name
Railway WAGO GmbH & Co. KG	-	Railway Ready

 Continued on next page

Approvals for marine applications

Approval	Standard	Certificate Name
BV Bureau Veritas S.A.	IEC 60998	11915/E0 BV

Downloads

Environmental Product Compliance

Compliance Search

Environmental Product Compliance
231-102/031-000

Documentation

Additional Information

Technical Section	03.04.2019	pdf 2027.26 KB

CAD/CAE-Data

CAD data

2D/3D Models
231-102/031-000

CAE data

EPLAN Data Portal
231-102/031-000

ZUKEN Portal
231-102/031-000

1 Compatible Products

1.1 System counterpart

1.1.1 Male connector/plug

Item No.: 231-602
1-conductor male connector; CAGE CLAMP®; 2.5 mm²; Pin spacing 5 mm; 2-pole; gray

Item No.: 231-432/001-000
THT male header; 1.0 x 1.0 mm solder pin; angled; Pin spacing 5 mm; 2-pole; gray

Item No.: 231-132/001-000
THT male header; 1.0 x 1.0 mm solder pin; straight; Pin spacing 5 mm; 2-pole; gray

Continued on next page

1.2 Optional Accessories

1.2.1 Cover

1.2.1.1 Cover

Item No.: 231-668
Lockout caps; for covering unused clamping units; gray

1.2.2 Ferrule

1.2.2.1 Ferrule

Item No.: 216-301
Ferrule; Sleeve for 0.25 mm² / AWG 24; insulated; electro-tin plated; yellow

Item No.: 216-302
Ferrule; Sleeve for 0.34 mm² / 22 AWG; insulated; electro-tin plated; light turquoise

Item No.: 216-201
Ferrule; Sleeve for 0.5 mm² / 20 AWG; insulated; electro-tin plated; electrolytic copper; acc. to DIN 46228, Part 4/09.90; white

Item No.: 216-101
Ferrule; Sleeve for 0.5 mm² / AWG 22; uninsulated; electro-tin plated; silver-colored

Item No.: 216-202
Ferrule; Sleeve for 0.75 mm² / 18 AWG; insulated; electro-tin plated; gray

Item No.: 216-102
Ferrule; Sleeve for 0.75 mm² / 18 AWG; uninsulated; electro-tin plated; silver-colored

Item No.: 216-203
Ferrule; Sleeve for 1 mm² / AWG 18; insulated; electro-tin plated; red

Item No.: 216-103
Ferrule; Sleeve for 1 mm² / AWG 18; uninsulated; electro-tin plated

Item No.: 216-204
Ferrule; Sleeve for 1.5 mm² / AWG 16; insulated; electro-tin plated; black

Item No.: 216-104
Ferrule; Sleeve for 1.5 mm² / AWG 16; uninsulated; electro-tin plated; silver-colored

1.2.3 Installation

1.2.3.1 Mounting accessories

Item No.: 231-295
Screw with nut

Item No.: 231-195
Screw with nut; M2x12; for fixing element

Item No.: 209-147
Self-tapping screw

Item No.: 231-194
Self-tapping screw; B 2.2x13, fixing hole 1.8 mm Ø

1.2.4 Insulation stop

1.2.4.1 Insulation stop

Item No.: 231-670
Insulation stop; 0.08-0.2 mm² / 0.2 mm² "s"; white

Item No.: 231-671
Insulation stop; 0.25 - 0.5 mm²; light gray

Item No.: 231-672
Insulation stop; 0.75 - 1 mm²; dark gray

 Continued on next page

1.2.5 Jumper

1.2.5.1 Jumper

Item No.: 231-902
Jumper; for conductor entry; 2-way; insulated; gray

1.2.6 Marking

1.2.6.1 Marking strip

Item No.: 210-331/500-103
Marking strips; as a DIN A4 sheet; MARKED; 1-12 (300x); Height of marker strip: 2.3 mm/0.091 in; Strip length 182 mm; Horizontal marking; Self-adhesive; white

Item No.: 210-332/500-202
Marking strips; as a DIN A4 sheet; MARKED; 1-16 (160x); Height of marker strip: 3 mm; Strip length 182 mm; Horizontal marking; Self-adhesive; white

Item No.: 210-332/500-205
Marking strips; as a DIN A4 sheet; MARKED; 1-32 (80x); Height of marker strip: 3 mm; Strip length 182 mm; Horizontal marking; Self-adhesive; white

Item No.: 210-331/500-104
Marking strips; as a DIN A4 sheet; MARKED; 13-24 (300x); Height of marker strip: 2.3 mm/0.091 in; Strip length 182 mm; Horizontal marking; Self-adhesive; white

Item No.: 210-332/500-204
Marking strips; as a DIN A4 sheet; MARKED; 17-32 (160x); Height of marker strip: 3 mm; Strip length 182 mm; Horizontal marking; Self-adhesive; white

Item No.: 210-332/500-206
Marking strips; as a DIN A4 sheet; MARKED; 33-48 (160x); Height of marker strip: 3 mm; Strip length 182 mm; Horizontal marking; Self-adhesive; white

1.2.7 Strain relief

1.2.7.1 Strain relief housing

Item No.: 232-602
Strain relief housing; for female and male connectors; 2 parts; Pin spacing 5 mm; 2-pole; gray

1.2.8 Test and measurement

1.2.8.1 Testing accessories

Item No.: 210-136
Test plug; 2 mm Ø; with 500 mm cable; red

Item No.: 231-661
Test plugs for female connectors; for 5 mm and 5.08 mm pin spacing; 2,50 mm²; light gray

Continued on next page

1.2.9 Tool

1.2.9.1 Operating tool

Item No.: 231-231
Combination operating tool; red

Item No.: 210-720
Operating tool; Blade: 3.5 x 0.5 mm; with a partially insulated shaft; multicoloured

Item No.: 210-657
Operating tool; Blade: 3.5 x 0.5 mm; with a partially insulated shaft; short; multi-coloured

Item No.: 209-132
Operating tool; for connecting comb-style jumper bar; made of insulating material; 2-way; natural

Item No.: 209-130
Operating tool; made of insulating material; 1-way; for 264 Series (1-/2-way), 280, 281 Series (up to 3-way); natural

Item No.: 231-291
Operating tool; made of insulating material; 1-way; loose; red

Item No.: 231-131
Operating tool; made of insulating material; 1-way; loose; white

Item No.: 280-432
Operating tool; made of insulating material; 2-way; white

Item No.: 231-159
Operating tool; natural

Installation Notes

Conductor termination

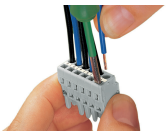

Inserting a conductor via 3.5 mm screwdriver – CAGE CLAMP® actuation parallel to conductor entry.

Inserting a conductor via 3.5 mm screwdriver – CAGE CLAMP® actuation perpendicular to conductor entry.

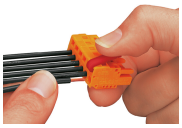

Inserting a conductor into CAGE CLAMP® unit via operating tool (231-291).

Inserting a conductor via operating tool.

Coding

Coding a female connector by removing coding finger(s).

Testing

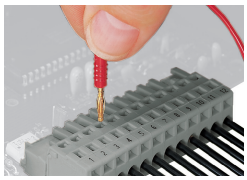

Testing – female connector with CAGE CLAMP®
Integrated test ports for testing perpendicular to conductor entry via 2 or 2.3 mm Ø test plug

 Continued on next page

Installation

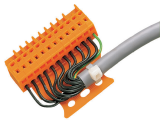

Male connector with strain relief plate

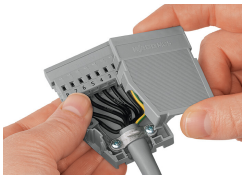

Strain relief housing shown with a male connector equipped with CAGE CLAMP®

Marking

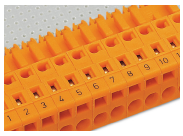

Labeling via direct marking or self-adhesive strips.