Data Sheet | Item Number: 2200-1201

2-conductor through terminal block; with push-button; 1 mm²; with test port; side and center marking; for DIN-rail 35 x 15 and 35 x 7.5; Push-in CAGE CLAMP®; 1,00 mm²; gray

https://www.wago.com/2200-1201

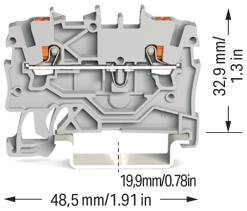

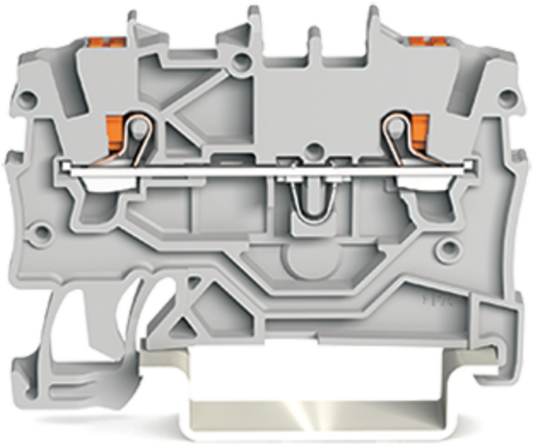

Color: gray

Similar to illustration

Through terminal block, 2200 Series, gray

Connect conductors quickly and securely with this through terminal block (item number 2200-1201). Conductors can only be connected to this through terminal block if their strip length is between 9 and 11 mm . Whether for industrial or building applications, you can use our through terminal blocks to connect electrical conductors quickly and safely. We offer variants for both classic through-wiring and potential distribution. This product features conductor terminals and utilizes Push-in CAGE CLAMP®. Push-in CAGE CLAMP® technology provides a universal connection solution for any type of conductor. It allows both solid and fine-stranded conductors with ferrules to be inserted directly into the clamping point without the need for tools. The dimensions are (3.5 x 48.5 x 39.5) mm (width x height x depth). Depending on the type of conductor, this through terminal block is ideal for conductor cross sections ranging from 0.14 mm² to 1.5 mm².

Perfect termination for all conductor types thanks to Push-in CAGE CLAMP®

A push-button is used to operate this through rail-mount terminal block. Our TOPJOB® S rail-mount terminal blocks are perfect for a wide range of industrial applications and modern building installations as they provide secure electrical connections. You can work anywhere in the world and on any application with just a single rail-mount terminal block system. This product is designed for specific Ex applications (please refer to the product datasheet).

- The right solution for every wiring task
- Actuation via push-button
- Suitable for specific Ex applications
- Ready to install, immediately usable

 Continued on next page

Electrical data

Ratings per	IEC/EN 60947-7-1		
Overvoltage category	III	III	II
Pollution degree	3	2	2
Nominal voltage	800 V	-	-
Rated impulse withstand voltage	8 kV	-	-
Rated current	13.5 A	-	-
Current at conductor cross-section (max.) mm²	17.5 A	-	-

Approvals per	UL 1059		
Use group	B	C	D
Rated voltage	600 V	600 V	-
Rated current	10 A	10 A	-

Approvals per	CSA 22.2 No 158		
Use group	B	C	D
Rated voltage	600 V	600 V	-
Rated current	10 A	10 A	-

Ex information	
Reference to hazardous areas	See “Downloads – Documentation – Additional Information: Technical Section; Technical Explications”
Ratings per	ATEX: PTB 18 ATEX 1004 U / IECEx: PTB 18.0010U (Ex eb IIC Gb)
Rated voltage EN (Ex e II)	550 V
Rated current (Ex e II)	13 A
Rated current (Ex e II) with jumper	12 A

Power Loss	
Power loss, per pole (potential)	0.7711 W
Rated current I_N for power loss specification	18 A
Resistance value for specified, current-dependent power loss	0.00238 Ω

General information	
Wiring direction	Front-entry wiring

Connection Data

Clamping units	2
Total number of potentials	1
Number of levels	1
Number of jumper slots	2

Connection 1	
Connection technology	Push-in CAGE CLAMP®
Actuation type	Push-button
Connectable conductor materials	Copper
Nominal cross-section	1 mm²
Solid conductor	0.14 … 1.5 mm² / 24 … 16 AWG
Solid conductor; push-in termination	0.5 … 1.5 mm² / 20 … 16 AWG
Stranded conductor	0.14 … 1.5 mm² / 24 … 16 AWG
Fine-stranded conductor	0.14 … 1.5 mm² / 24 … 16 AWG
Fine-stranded conductor; with insulated ferrule	0.14 … 0.75 mm² / 24 … 18 AWG
Fine-stranded conductor; with ferrule; push-in termination	0.5 … 0.75 mm² / 20 … 18 AWG
Note (conductor cross-section)	Depending on the conductor characteristic, a conductor with a smaller cross-section can also be inserted via push-in termination.
Strip length	9 … 11 mm / 0.35 … 0.43 inches
Wiring direction	Front-entry wiring

 Continued on next page

Physical data

Width	3.5 mm / 0.138 inches
Height	48.5 mm / 1.909 inches
Depth from upper-edge of DIN-rail	32.9 mm / 1.295 inches
Depth	39.5 mm / 1.555 inches

Mechanical data

Mounting type	DIN-35 rail
Marking level	Center/side marking

Material data

Note (material data)	Information on material specifications can be found here
Color	gray
Material group	I
Insulation material (main housing)	Polyamide (PA66)
Flammability class per UL94	V0
Fire load	0.09 MJ
Actuator color	orange
Weight	3.7 g

Environmental requirements

Processing temperature	-35 ... +85 °C
Continuous operating temperature	-60 ... +105 °C

Environmental Testing

Test specification: Railway applications – Rolling stock – Electronic equipment	DIN EN 50155 (VDE 0115-200):2022-06
Test procedure: Railway applications – Rolling stock equipment – Vibration and shock tests	DIN EN 61373 (VDE 0115-0106):2011-04
Spectrum/Mounting location	Service life test, Category 1, Class A/B
Functional test with noise-like oscillations	Test passed according to Section 8 of the standard
Frequency	f_1 = 5 Hz to f_2 = 150 Hz
Acceleration	0.101g (highest test level used for all axes)
Test duration per axis	10 min.
Test directions	X, Y and Z axes
Monitoring of contact faults and interruptions	Passed
Voltage drop measurement before and after each axis	Passed
Simulated service life test through increased levels of noise-like oscillations	Test passed according to Section 9 of the standard
Frequency	f_1 = 5 Hz to f_2 = 150 Hz
Acceleration	0.572g (highest test level used for all axes)
Test duration per axis	5 h
Test directions	X, Y and Z axes
Extended testing: Monitoring of contact faults and interruptions	Passed
Extended testing: Voltage drop measurement before and after each axis	Passed
Shock test	Test passed according to Section 10 of the standard
Shock pulse form	Half sine
Acceleration	5g (highest test level used for all axes)
Shock duration	30 ms
Number of shocks (per axis)	3 pos. und 3 neg.

 Continued on next page

Environmental Testing

Test directions	X, Y and Z axes
Extended testing: Monitoring of contact faults and interruptions	Passed
Extended testing: Voltage drop measurement before and after each axis	Passed
Vibration and shock stress for rolling stock equipment	Passed

Commercial data

PU (SPU)	100 pcs
Packaging type	Box
Country of origin	DE
GTIN	4055143691543
Customs tariff number	85369010000

Product Classification

UNSPSC	39121410
eCl@ss 10.0	27-14-11-20
eCl@ss 9.0	27-14-11-20
ETIM 9.0	EC000897
ETIM 10.0	EC000897
ECCN	NO US CLASSIFICATION

Environmental Product Compliance

RoHS Compliance Status	Compliant,No Exemption

Approvals / Certificates

General approvals

Approval	Standard	Certificate Name
CCA DEKRA Certification B.V.	EN 60947	NTR NL 8026
CSA CSA Group	C22.2	70173737
cURus Underwriters Laboratories Inc.	UL 1059	E45172
KEMA/KEUR DEKRA Certification B.V.	EN 60947	71-134795

Declarations of conformity and manufacturer's declarations

Approval	Standard	Certificate Name
ATEX-Attestation of Conformity WAGO GmbH & Co. KG	-	-
EU-Declaration of Conformity WAGO GmbH & Co. KG	-	-
Railway WAGO GmbH & Co. KG	-	Z00004402.000
UK-Declaration of Conformity WAGO GmbH & Co. KG	-	-

 Continued on next page

Approvals for marine applications

Approval	Standard	Certificate Name
ABS American Bureau of Shipping	-	24-0095985-PDA
BV Bureau Veritas S.A.	IEC 60947	58186/A0 BV
DNV GL Det Norske Veritas, Germanischer Lloyd	-	TAE00003JT
LR Lloyds Register	-	19/20050
PRS Polski Rejestr Statków	-	TAE00003JT

Approvals for hazardous areas

Approval	Standard	Certificate Name
AEx Underwriters Laboratories Inc.	UL 60079	E185892 (AEx eb IIC resp. Ex eb IIC)
ATEX Physikalisch Technische Bundesanstalt	EN IEC 60079-0	PTB 18 ATEX 1003 U
CCC CQST/CNEx	GB/T 3836.3	2020312313000166 (Ex eb IIC Gb, Ex eb I Mb)
IECEx Physikalisch Technische Bundesanstalt	IEC 60079	IECEx PTB 18.0010U (Ex eb IIC Gb and Ex eb I Mb)
INMETRO TÜV Rheinland do Brasil Ltda.	IEC 60079	TÜV 23.1452 U

Downloads

Environmental Product Compliance

Compliance Search

Environmental Product Compliance 2200-1201

Documentation

Bid Text

2200-1201	19.02.2019	xml 3.75 KB	
2200-1201	08.08.2018	docx 14.58 KB	

CAD/CAE-Data

CAD data

2D/3D Models 2200-1201

CAE data

EPLAN Data Portal 2200-1201

ZUKEN Portal 2200-1201

Continued on next page

1 Compatible Products

1.1 Required Accessories

1.1.1 End plate

1.1.1.1 End plate

Item No.: 2000-1291
End and intermediate plate; 0.7 mm thick; gray

Item No.: 2000-1292
End and intermediate plate; 0.7 mm thick; orange

Item No.: 209-191
Separator for Ex e/Ex i applications; 3 mm thick; 120 mm wide; orange

1.2 Optional Accessories

1.2.1 DIN-rail

1.2.1.1 Mounting accessories

Item No.: 210-196
Aluminum carrier rail; 35 x 8.2 mm; 1.6 mm thick; 2 m long; unslotted; similar to EN 60715; silver-colored

Item No.: 210-198
Copper carrier rail; 35 x 15 mm; 2.3 mm thick; 2 m long; unslotted; according to EN 60715; copper-colored

Item No.: 210-197
Steel carrier rail; 35 x 15 mm; 1.5 mm thick; 2 m long; slotted; similar to EN 60715; silver-colored

Item No.: 210-114
Steel carrier rail; 35 x 15 mm; 1.5 mm thick; 2 m long; unslotted; similar to EN 60715; silver-colored

Item No.: 210-118
Steel carrier rail; 35 x 15 mm; 2.3 mm thick; 2 m long; unslotted; according to EN 60715; silver-colored

Item No.: 210-115
Steel carrier rail; 35 x 7.5 mm; 1 mm thick; 2 m long; slotted; according to EN 60715; "Hole width 18 mm; silver-colored

Item No.: 210-112
Steel carrier rail; 35 x 7.5 mm; 1 mm thick; 2 m long; slotted; according to EN 60715; "Hole width 25 mm; silver-colored

Item No.: 210-113
Steel carrier rail; 35 x 7.5 mm; 1 mm thick; 2 m long; unslotted; according to EN 60715; silver-colored

1.2.2 End plate

1.2.2.1 End plate

Item No.: 209-190
Separator for Ex e/Ex i applications; 3 mm thick; 90 mm wide; orange

1.2.3 Ferrule

1.2.3.1 Ferrule

Item No.: 216-241
Ferrule; Sleeve for 0.5 mm² / 20 AWG; insulated; electro-tin plated; electrolytic copper; gastight crimped; acc. to DIN 46228, Part 4/09.90; white

Item No.: 216-242
Ferrule; Sleeve for 0.75 mm² / 18 AWG; insulated; electro-tin plated; electrolytic copper; gastight crimped; acc. to DIN 46228, Part 4/09.90; gray

Item No.: 216-243
Ferrule; Sleeve for 1 mm² / AWG 18; insulated; electro-tin plated; electrolytic copper; gastight crimped; acc. to DIN 46228, Part 4/09.90; red

Continued on next page

1.2.4 Installation

1.2.4.1 Cover

Item No.: 709-156
Cover; Type 3; suitable for cover carrier, type 3; 1 m long; transparent

1.2.4.2 Cover carrier

Item No.: 709-169
Cover carrier; Type 3; incl. fixing/retaining screws and knurled nut; suitable for 279 to 282 and 880 Series rail-mounted terminal blocks; suitable for 264 Series miniature rail-mounted terminal blocks; suitable for 270 Series sensor and actuator terminal blocks; gray

1.2.5 Jumper

1.2.5.1 Jumper

Item No.: 2000-406/020-000
Delta jumper; insulated; light gray

Item No.: 2000-410/000-006
Jumper; 10-way; insulated; blue

Item No.: 2000-410
Jumper; 10-way; insulated; light gray

Item No.: 2000-410/000-005
Jumper; 10-way; insulated; red

Item No.: 2000-402/000-006
Jumper; 2-way; insulated; blue

Item No.: 2000-402
Jumper; 2-way; insulated; light gray

Item No.: 2000-402/000-005
Jumper; 2-way; insulated; red

Item No.: 2000-402/000-018
Jumper; 2-way; insulated; yellow-green

Item No.: 2000-403/000-006
Jumper; 3-way; insulated; blue

Item No.: 2000-403
Jumper; 3-way; insulated; light gray

Item No.: 2000-403/000-005
Jumper; 3-way; insulated; red

Item No.: 2000-404/000-006
Jumper; 4-way; insulated; blue

Item No.: 2000-404
Jumper; 4-way; insulated; light gray

Item No.: 2000-404/000-005
Jumper; 4-way; insulated; red

Item No.: 2000-405/000-006
Jumper; 5-way; insulated; blue

Item No.: 2000-405
Jumper; 5-way; insulated; light gray

Item No.: 2000-405/000-005
Jumper; 5-way; insulated; red

Item No.: 2000-406/000-006
Jumper; 6-way; insulated; blue

Item No.: 2000-406
Jumper; 6-way; insulated; light gray

Item No.: 2000-406/000-005
Jumper; 6-way; insulated; red

Item No.: 2000-407/000-006
Jumper; 7-way; insulated; blue

Item No.: 2000-407
Jumper; 7-way; insulated; light gray

Item No.: 2000-407/000-005
Jumper; 7-way; insulated; red

Item No.: 2000-408/000-006
Jumper; 8-way; insulated; blue

Item No.: 2000-408
Jumper; 8-way; insulated; light gray

Item No.: 2000-408/000-005
Jumper; 8-way; insulated; red

Item No.: 2000-409/000-006
Jumper; 9-way; insulated; blue

Item No.: 2000-409
Jumper; 9-way; insulated; light gray

Item No.: 2000-409/000-005
Jumper; 9-way; insulated; red

Item No.: 2000-440
Jumper; from 1 to 10; insulated; light gray

Item No.: 2000-433/000-006
Jumper; from 1 to 3; insulated; blue

Item No.: 2000-433
Jumper; from 1 to 3; insulated; light gray

Item No.: 2000-433/000-005
Jumper; from 1 to 3; insulated; red

Item No.: 2000-434
Jumper; from 1 to 4; insulated; light gray

Item No.: 2000-435
Jumper; from 1 to 5; insulated; light gray

Item No.: 2000-436
Jumper; from 1 to 6; insulated; light gray

 Continued on next page

1.2.5.1 Jumper

Item No.: 2000-437
Jumper; from 1 to 7; insulated; light gray

Item No.: 2000-438
Jumper; from 1 to 8; insulated; light gray

Item No.: 2000-439
Jumper; from 1 to 9; insulated; light gray

Item No.: 2000-405/011-000
Star point jumper; 3-way; insulated; light gray

Item No.: 210-103
Wire commoning chain; 0.5 mm²; insulated; black

Item No.: 210-123
Wire commoning chain; insulated; blue

1.2.6 Marking

1.2.6.1 Marker

Item No.: 793-3501
WMB marking card; as card; plain; snap-on type; white

Item No.: 2009-113/000-006
WMB-Inline; for Smart Printer; 2300 pieces on roll; plain; snap-on type; blue

Item No.: 2009-113/000-007
WMB-Inline; for Smart Printer; 2300 pieces on roll; plain; snap-on type; gray

Item No.: 2009-113/000-023
WMB-Inline; for Smart Printer; 2300 pieces on roll; plain; snap-on type; green

Item No.: 2009-113/000-017
WMB-Inline; for Smart Printer; 2300 pieces on roll; plain; snap-on type; light green

Item No.: 2009-113/000-012
WMB-Inline; for Smart Printer; 2300 pieces on roll; plain; snap-on type; orange

Item No.: 2009-113/000-005
WMB-Inline; for Smart Printer; 2300 pieces on roll; plain; snap-on type; red

Item No.: 2009-113/000-024
WMB-Inline; for Smart Printer; 2300 pieces on roll; plain; snap-on type; violet

Item No.: 2009-113
WMB-Inline; for Smart Printer; 2300 pieces on roll; plain; snap-on type; white

Item No.: 2009-113/000-002
WMB-Inline; for Smart Printer; 2300 pieces on roll; plain; snap-on type; yellow

1.2.6.2 Marking strip

Item No.: 2009-110
Marking strips; for Smart Printer; 50 m on roll; not stretchable; plain; snap-on type; white

1.2.7 Push-in type wire jumper

1.2.7.1 Jumper

Item No.: 2009-404
Push-in type wire jumper; 0.75 mm²; insulated; 110 mm long; gray

Item No.: 2009-406
Push-in type wire jumper; 0.75 mm²; insulated; 250 mm long; gray

Item No.: 2009-402
Push-in type wire jumper; 0.75 mm²; insulated; 60 mm long; gray

Continued on next page

1.2.8 Screwless end stop

1.2.8.1 Mounting accessories

Item No.: 249-117
Screwless end stop; 10 mm wide; for DIN-rail 35 x 15 and 35 x 7.5; gray

Item No.: 249-116
Screwless end stop; 6 mm wide; for DIN-rail 35 x 15 and 35 x 7.5; gray

1.2.9 Test and measurement

1.2.9.1 Testing accessories

Item No.: 2000-560
Modular TOPJOB®S connector; modular; for jumper contact slot; 10-pole; gray

Item No.: 2000-552
Modular TOPJOB®S connector; modular; for jumper contact slot; 2-pole; gray

Item No.: 2000-553
Modular TOPJOB®S connector; modular; for jumper contact slot; 3-pole; gray

Item No.: 2000-554
Modular TOPJOB®S connector; modular; for jumper contact slot; 4-pole; gray

Item No.: 2000-555
Modular TOPJOB®S connector; modular; for jumper contact slot; 5-pole; gray

Item No.: 2000-556
Modular TOPJOB®S connector; modular; for jumper contact slot; 6-pole; gray

Item No.: 2000-557
Modular TOPJOB®S connector; modular; for jumper contact slot; 7-pole; gray

Item No.: 2000-558
Modular TOPJOB®S connector; modular; for jumper contact slot; 8-pole; gray

Item No.: 2000-559
Modular TOPJOB®S connector; modular; for jumper contact slot; 9-pole; gray

Item No.: 2000-549
Spacer module; modular; e.g., for bridging commoned terminal blocks; gray

Item No.: 2009-174
Test plug adapter; for 4 mm Ø test plugs; for testing TOPJOB®S rail-mounted terminal blocks; gray

Item No.: 210-136
Test plug; 2 mm Ø; with 500 mm cable; red

Item No.: 2009-182
Testing tap; for max. 2.5 mm²; tool-free connection for individual test wires 0.08 - 2.5 mm; gray

Item No.: 2000-511
TOPJOB®S L-type test plug module; modular; for jumper contact slot; 1-pole; gray

Item No.: 2000-510
TOPJOB®S L-type test plug module; modular; for jumper contact slot; gray

1.2.10 Tool

1.2.10.1 Operating tool

Item No.: 210-719
Operating tool; Blade: 2.5 x 0.4 mm; with a partially insulated shaft

Item No.: 210-648
Operating tool; Blade: 2.5 x 0.4 mm; with a partially insulated shaft; angled; short

Item No.: 210-647
Operating tool; Blade: 2.5 x 0.4 mm; with a partially insulated shaft; multicoloured

Installation Notes

Conductor termination

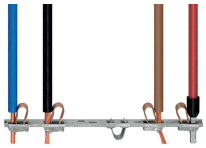

All conductor types at a glance

Push-in termination of solid and ferruled conductors

Insert fine-stranded conductors via operating tool.

Removing all conductors via operating tool.

Continued on next page

Commoning

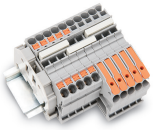

Insert a push-in type jumper bar and push down until it hits the backstop.

Commoning with step-down jumpers.

Testing

Testing with a 2 mm Ø test plug (max. 42 V).

Marking

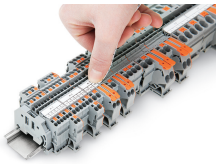

Snapping a marking strip into a marker slot.

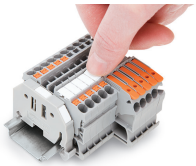

Snapping a marking strip into the marker slot.