Data Sheet | Item Number: 216-263

Ferrule; Sleeve for 1 mm² / AWG 18; insulated; electro-tin plated; electrolytic copper; gastight crimped; acc. to DIN 46228, Part 4/09.90; red

https://www.wago.com/216-263

Color: red

Similar to illustration

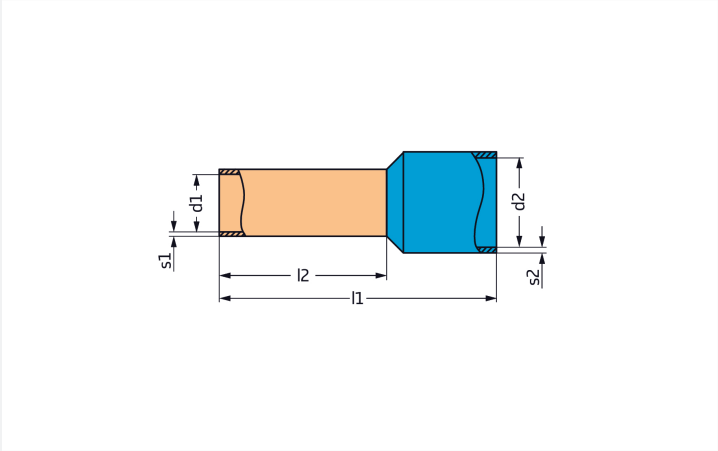

Dimensions in mm

Connection Data	
Metric cross-section of the ferrule	1 mm²
Strip length	14 ... 15 mm / 0.55 ... 0.59 inches
Cross-section (AWG) of ferrule	18 AWG

Physical data	
Total length (L)	18 mm
Wall thickness of crimp sleeve (W2)	0.15 mm
Wall thickness (plastic collar W1)	0.25 mm
Crimp length (length of sleeve L1)	12 mm
Inner diameter of plastic collar (D1)	3 mm
Diameter crimp sleeve inside (D2)	1.4 mm

Mechanical data	
Plastic collar	Standard collar
Suitable	2002 to 2006 Series

Material data	
Color	red
Fire load	0.002 MJ
Weight	0.1 g

Continued on next page

Commercial data

Product Group	2 (Terminal Block Accessories)
PU (SPU)	1000 pcs
Packaging type	Box
Country of origin	DE
GTIN	4044918599887
Customs tariff number	85369010000

Product Classification

UNSPSC	39121405
eCl@ss 10.0	27-40-02-01
eCl@ss 9.0	27-40-02-01
ETIM 9.0	EC000005
ETIM 10.0	EC000005
ECCN	NO US CLASSIFICATION

Environmental Product Compliance

RoHS Compliance Status	Compliant,No Exemption

Downloads

Environmental Product Compliance

Compliance Search

Environmental Product Compliance 216-263

Documentation

Bid Text

216-263	19.02.2019	xml 2.80 KB	
216-263	11.09.2017	doc 23.50 KB	

CAD/CAE-Data

CAD data

2D/3D Models 216-263

 Continued on next page

Installation Notes

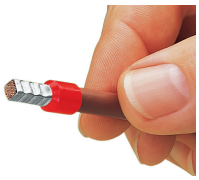

A perfect gas-tight crimp – both electrically and mechanically reliable