# Data Sheet | Item Number: 216-209

Ferrule; Sleeve for 10 mm² / AWG 8; insulated; electro-tin plated; red

https://www.wago.com/216-209

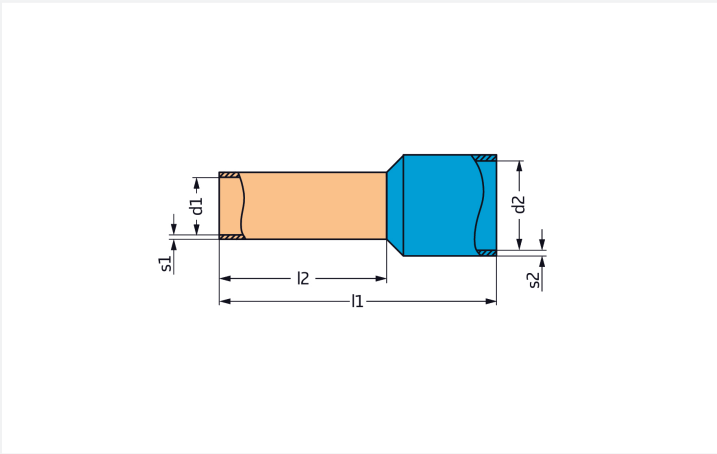


Color: ■ red

Dimensions in mm

| Connection Data | |
|---|---|
| Metric cross-section of the ferrule | 6 mm² |
| Strip length | 16 ... 17 mm / 0.63 ... 0.67 inches |
| Cross-section (AWG) of ferrule | 8 AWG |

| Physical data | |
|---|---|
| Total length (L) | 22 mm |
| Wall thickness of crimp sleeve (W2) | 0.2 mm |
| Wall thickness (plastic collar W1) | 0.4 mm |
| Crimp length (length of sleeve L1) | 12 mm |
| Inner diameter of plastic collar (D1) | 7.6 mm |
| Diameter crimp sleeve inside (D2) | 4.5 mm |

| Mechanical data | |
|---|---|
| Plastic collar | Standard collar |

| Material data | |
|---|---|
| Color | red |
| Weight | 0.5 g |


Continued on next page

## Commercial data

| | |
|---|---|
| Product Group | 2 (Terminal Block Accessories) |
| PU (SPU) | 1000 (100) pcs |
| Packaging type | Box |
| Country of origin | DE |
| GTIN | 4017332277549 |
| Customs tariff number | 85369010000 |

## Product Classification

| | |
|---|---|
| UNSPSC | 39121405 |
| eCl@ss 10.0 | 27-40-02-01 |
| eCl@ss 9.0 | 27-40-02-01 |
| ETIM 9.0 | EC000005 |
| ETIM 10.0 | EC000005 |
| ECCN | NO US CLASSIFICATION |

## Environmental Product Compliance

| | |
|---|---|
| RoHS Compliance Status | Compliant,No Exemption |

## Downloads

### Environmental Product Compliance

**Compliance Search**

Environmental Product Compliance 216-209

### Documentation

**Bid Text**

| | | | |
|---|---|---|---|
| 216-209 | 19.02.2019 | xml 2.80 KB | |
| 216-209 | 11.09.2017 | doc 24.00 KB | |

### CAD/CAE-Data

**CAD data**

2D/3D Models 216-209

 Continued on next page

## Installation Notes

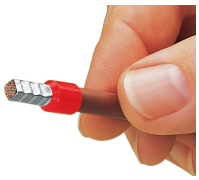

A perfect gas-tight crimp – both electrically and mechanically reliable