Data Sheet | Item Number: 209-120

Mounting foot; can be snapped on terminal blocks with snap-in mounting foot; for mounting on relay-modules; 6.4 mm wide; gray

https://www.wago.com/209-120

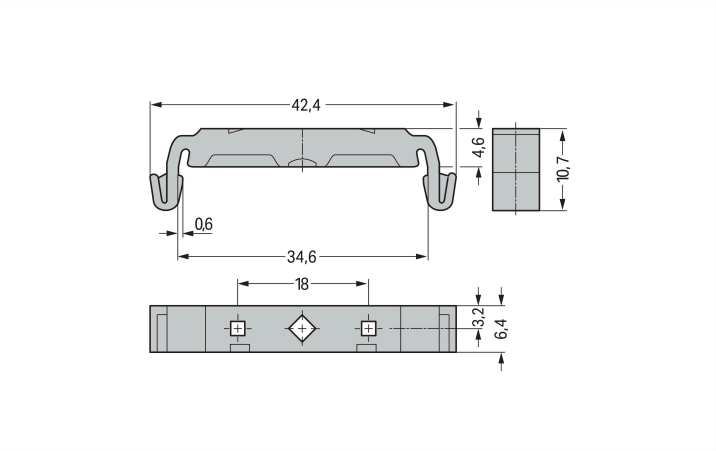

Color: gray

Dimensions in mm

This item includes:

Item No.: 209-119

Fixing screw; for 209-120 mounting carrier

Technical data

Mounting type	DIN-35 rail

Physical data

Width	6.4 mm / 0.252 inches
Height	42.3 mm / 1.665 inches
Depth	10.8 mm / 0.425 inches
Depth from upper-edge of DIN-rail	4.8 mm / 0.188 inches

Mechanical data

Suitable	for male and female connectors with snap-in mounting feet (for panel mounting)

Continued on next page

Material data

Color	gray
Material group	I
Insulation material (main housing)	Polyamide (PA66)
Flammability class per UL94	V0
Fire load	0.032 MJ
Weight	1.1 g

Commercial data

Product Group	2 (Terminal Block Accessories)
PU (SPU)	500 (25) pcs
Packaging type	Box
Country of origin	CH
GTIN	4017332272421
Customs tariff number	39269097900

Product Classification

UNSPSC	39121702
eCl@ss 10.0	27-14-11-92
eCl@ss 9.0	27-14-11-92
ETIM 9.0	EC002848
ETIM 10.0	EC002848
ECCN	NO US CLASSIFICATION

Environmental Product Compliance

RoHS Compliance Status	Compliant,No Exemption

Downloads

Environmental Product Compliance

Compliance Search

Environmental Product Compliance 209-120

Documentation

Bid Text

209-120	19.02.2019	xml 2.53 KB	
209-120	18.08.2017	doc 22.50 KB	

 Continued on next page

CAD/CAE-Data

CAD data	CAE data
2D/3D Models 209-120	EPLAN Data Portal 209-120
	WSCAD Universe 209-120
	ZUKEN Portal 209-120

Installation Notes

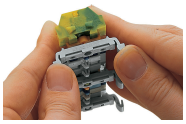

Terminal strip with snap-in mounting feet Snapping a mounting foot (209-120). (Distance between mounting feet: approx. 25 ... 30 mm)

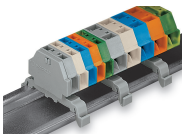

Terminal strip; with snap-in mounting feet; for DIN-35 rail